CALIFORNIA REGIONAL WATER QUALITY CONTROL BOARD

CENTRAL VALLEY REGION

11020 Sun Center Drive #200, Rancho Cordova, California 95670-6114
Phone (916) 464-3291 • FAX (916) 464-4645
http://www.waterboards.ca.gov/centralvalley

ORDER NO. R5-2007-0113
NPDES NO. CA0079243

WASTE DISCHARGE REQUIREMENTS AND MASTER RECLAMATION PERMIT FOR THE CITY OF LODI WHITE SLOUGH WATER POLLUTION CONTROL FACILITY SAN JOAQUIN COUNTY

The following Discharger is subject to waste discharge requirements as set forth in this Order:

Table 1. Discharger Information

Discharger	**City of Lodi**
Name of Facility	**White Slough Water Pollution Control Facility, Lodi**
Facility Address	**12751 North Thornton Road**
	Lodi, CA 95242
	San Joaquin County
The U.S. Environmental Protection Agency (USEPA) and the Regional Water Quality Control Board have classified this discharge as a major discharge.	

The discharge by the City of Lodi from the discharge points identified below is subject to waste discharge requirements as set forth in this Order:

Table 2. Discharge Location

Discharge Point	Discharge Description	Discharge Point Latitude	Discharge Point Longitude	Receiving Water
001	Tertiary treated municipal effluent	38º, 05’, 35” N	121º, 22’, 48” W	Dredger Cut
002	Tertiary treated municipal effluent	38º, 05’, 23” N	121º, 23’, 07” W	Reclamation Water
003	Combined treated municipal effluent, industrial wastewater, Offsite agricultural tailwater, onsite reuse land tailwater, biosolid supernatant, DAF thickener subnatant, and biosolids.	38º, 05’, 19.8” N	121º, 23’, 16.3” W	Groundwater (Land Application)

Table 3. Administrative Information

This Order was adopted by the Regional Water Quality Control Board on:	**14 September 2007**
This Order shall become effective on:	**3 November 2007**
This Order shall expire on:	**1 September 2012**
The Discharger shall file a Report of Waste Discharge in accordance with title 23, California Code of Regulations, as application for issuance of new waste discharge requirements no later than:	**4 March 2012**

IT IS HEREBY ORDERED, that Order No. 5-00-031 is rescinded upon the effective date of this Order except for enforcement purposes, and, in order to meet the provisions contained in division 7 of the Water Code (commencing with section 13000) and regulations adopted thereunder, and the provisions of the federal Clean Water Act (CWA) and regulations and guidelines adopted thereunder, the Discharger shall comply with the requirements in this Order.

I, PAMELA C. CREEDON, Executive Officer, do hereby certify that this Order with all attachments is a full, true, and correct copy of an Order adopted by the California Regional Water Quality Control Board, Central Valley Region, on **14 September 2007**.

_____

PAMELA C. CREEDON, Executive Officer

Table of Contents

I. Facility Information 1
II. Findings 1
III. Discharge Prohibitions 8
IV. Effluent Limitations and Discharge Specifications 8
A. Effluent Limitations – Discharge Point 001 8
B. Land Discharge Specifications – Discharge Point 003 12
C. Reclamation Specifications – Discharge Points 002 and 003 13
V. Receiving Water Limitations 13
A. Surface Water Limitations 13
B. Groundwater Limitations 15
VI. Provisions 16
A. Standard Provisions 16
B. Monitoring and Reporting Program (MRP) Requirements 20
C. Special Provisions 20
1. Reopener Provisions 20
2. Special Studies, Technical Reports and Additional Monitoring Requirements 23
3. Best Management Practices and Pollution Prevention 27
9
4. Construction, Operation and Maintenance Specifications 30
5. Special Provisions for Municipal Facilities (POTWs Only) 30
6. Other Special Provisions 34
7. Compliance Schedules 34
VII. Compliance Determination 36

List of Tables

Table 1. Discharger Information ..... Cover
Table 2. Discharge Location ..... Cover
Table 3. Administrative Information ..... Cover
Table 4. Facility Information 1
Table 5. Basin Plan Beneficial Uses 4
Table 6. Effluent Limitations (7.0 mgd) 9
Table 7. Effluent Limitations (7.2 mgd) 10
Table 8. Effluent Limitations (8.5 mgd) 11
Table 9. Interim Effluent Limitation 11
Table 10. Secondary Treated Effluent Limitations 13

List of Attachments

Attachment A – Definitions A-1
Attachment B – Site Location Map B-1
Attachment C – Flow Schematic C-1
Discharger's Agricultural Fields C-2
Attachment D – Standard Provisions D-1
Attachment E – Monitoring and Reporting Program (MRP) E-1
Attachment F – Fact Sheet F-1
Attachment G – DHS's Guidelines for the Preparation of an Engineering Report G-1
Attachment H – Constituents to be Monitored H-1

Attachment I - Requirements for Monitoring Well Installation Workplans and Reports..... I-1

I. FACILITY INFORMATION

The following Discharger is subject to waste discharge requirements as set forth in this Order:

Table 4. Facility Information

Discharger	City of Lodi
Name of Facility	White Slough Water Pollution Control Facility
Facility Address	12751 North Thornton Road
	Lodi, CA 95242
	San Joaquin County
Facility Contact, Title, and Phone	Mr. Del Kerlin, Wastewater Treatment Superintendent (209) 333-6869
Mailing Address	1331 South Ham Lane, Lodi, CA 95242
Type of Facility	Publicly Owned Treatment Works (POTW)
Facility Design Flow	7.0 million gallons per day (mgd) (with expansion to 8.5 mgd)

II. FINDINGS

The California Regional Water Quality Control Board, Central Valley Region (hereinafter Regional Water Board), finds:

A. Background. City of Lodi (hereinafter Discharger) is currently discharging pursuant to Order No. 5-00-031 and National Pollutant Discharge Elimination System (NPDES) Permit No. CA0079243. The Discharger submitted a Report of Waste Discharge, dated 28 July 2004**,** and applied for a NPDES permit renewal to increase the discharge from 7.0 mgd to 8.5 mgd of tertiary treated wastewater from White Slough Water Pollution Control Facility**,** hereinafter Facility, and for land application of untreated industrial wastewater and treated municipal effluent. The application was deemed complete on 28 January 2005.

For the purposes of this Order, references to the “discharger” or “permittee” in applicable federal and state laws, regulations, plans, or policy are held to be equivalent to references to the Discharger herein.

B. Facility Description. The Discharger owns and operates two separate wastewater collection systems, a municipal wastewater line and an industrial wastewater line that collects primarily food processing wastewater from Pacific Coast Producers, a local cannery. The Facility’s wastewater treatment system consists of a head works with comminutors, mechanical grit removal, primary sedimentation, conventional activated sludge, secondary sedimentation, tertiary treatment using cloth media filtration, and ultraviolet light pathogen deactivation (UV Disinfection). The Discharger is upgrading its Facility; Phase 1 and 2 have been completed, and Phase 3 has begun. Phase 1 and 2 expanded the Facility’s capacity to 8.5 mgd and improved the effluent quality through tertiary filtration and UV Disinfection. The final phase, Phase 3, should improve nitrification, and a detailed description of these planned changes are discussed in the

attached Fact Sheet (Attachment F, Section II.E).

In general, during the months of September through June, the municipal wastewater is treated to tertiary standards and disinfected (UV Disinfection) prior to discharge from Discharge Point 001 (see table on cover page) to Dredger Cut, a water of the United States, and part of the Sacramento-San Joaquin Delta. During the summer months (mid-June through early-September), the municipal wastewater is treated to at least secondary level, and then pumped to the Facility's 40-acres of unlined storage ponds, and is eventually used to irrigate the Discharger's agricultural fields. The Discharger's agricultural fields cover approximately 790 acres adjacent to the Facility (see Attachment C-2) and are used for fodder, fiber, or feed crops that are not directly used for human consumption (hereinafter The Agricultural Fields). Throughout the year, the Discharger also supplies treated municipal wastewater (Recycled Water) through Discharge Point 002 (see table on cover page) to Northern California Power Agency (NCPA) and San Joaquin County (SJCo) Vector Control District. The Recycled Water is primarily used as cooling water makeup for NCPA, and then the cooling tower blowdown is returned to the headworks of the Facility's treatment system. SJCo Vector Control District uses only about 1% of the Recycled Water for its fish rearing ponds.

The industrial wastewater does not receive treatment; instead, during the summer months, the untreated industrial wastewater, which is derived of approximately 92% food processing waste from the Pacific Coast Producers cannery, 7% flows from metal finishers, and 1% winery waste, is applied directly to The Agricultural Fields. During the remainder of the year, when the industrial wastewater flows are significantly less and primarily comprised of the metal finishers' and other industries' wastewater, the industrial wastewater is also stored in the Facility's 40-acres of unlined ponds.

Biosolids are treated by anaerobic digestion and stored in the Facility's lined sludge stabilization pond. During the summer months, this biosolid slurry is mixed with the storage ponds wastewater and the industrial untreated-wastewater stream, and applied through Discharge Point 003 (see table on cover page) by flood irrigation to The Agricultural Fields.

Attachment B of this Order provides a map of the area around the Facility. Attachment C provides a flow schematic of the Facility and a map of the Discharger's agricultural fields. Section II. Facility Description, in Attachment F of this Order, contains further details about the Facility's systems.

C. Legal Authorities. This Order is issued pursuant to section 402 of the federal Clean Water Act (CWA) and implementing regulations adopted by the U.S. Environmental Protection Agency (USEPA) and chapter 5.5, division 7 of the California Water Code (commencing with section 13370). It shall serve as a NPDES permit for point source discharges from this facility to surface waters. This Order also serves as Waste Discharge Requirements (WDRs) pursuant to article 4, chapter 4, division 7 of the Water Code (commencing with section 13260).

D. Background and Rationale for Requirements. The Regional Water Board developed the requirements in this Order based on information submitted as part of the application,

through monitoring and reporting programs, and other available information. The Fact Sheet (Attachment F), which contains background information and rationale for Order requirements, is hereby incorporated into this Order and constitutes part of the Findings for this Order. All other attachments (A through E, G, and H) are also incorporated into this Order.

E. California Environmental Quality Act (CEQA). Under California Water Code (CWC) section 13389, this action to adopt an NPDES permit is exempt from the provisions of CEQA, Public Resources Code sections 21100-21177.

F. Technology-based Effluent Limitations. Section 301(b) of the CWA and implementing USEPA permit regulations at Part 122.44, Title 40 of the Code of Federal Regulations (CFR)[1] require that permits include conditions meeting applicable technology-based requirements at a minimum, and any more stringent effluent limitations necessary to meet applicable water quality standards. The discharge authorized by this Order must meet minimum federal technology-based requirements based on Secondary Treatment Standards at Part 133. A detailed discussion of the technology-based effluent limitations' development is included in the Fact Sheet (Attachment F, Section IV.B.).

G. Water Quality-based Effluent Limitations. Section 301(b) of the CWA and Part 122.44(d) of CFR require that permits include limitations more stringent than applicable federal technology-based requirements where necessary to achieve applicable water quality standards. This Order contains requirements, expressed as a technology equivalence requirement, more stringent than secondary treatment requirements that are necessary to meet applicable water quality standards. The Regional Water Board has considered the factors listed in CWC Section 13241 in establishing these requirements. The rationale for these requirements, which consist of tertiary treatment or equivalent requirements, is discussed in the Fact Sheet (Attachment F, Section IV.C.).

CFR Part 122.44(d)(1)(i) mandates that permits include effluent limitations for all pollutants that are or may be discharged at levels that have the reasonable potential to cause or contribute to an exceedance of a water quality standard, including numeric and narrative objectives within a standard. Where reasonable potential has been established for a pollutant, but there is no numeric criterion or objective for the pollutant, water quality-based effluent limitations (WQBELs) must be established using: (1) USEPA criteria guidance under CWA section 304(a), supplemented where necessary by other relevant information; (2) an indicator parameter for the pollutant of concern; or (3) a calculated numeric water quality criterion, such as a proposed State criterion or policy interpreting the State's narrative criterion, supplemented with other relevant information, as provided in CFR Part 122.44(d)(1)(vi).

H. Water Quality Control Plans. The Regional Water Board adopted a *Water Quality Control Plan, Fourth Edition (Revised September 2004), for the Sacramento and San Joaquin River Basins* (hereinafter Basin Plan) that designates beneficial uses,

[1] All further statutory references are to title 40 of the Code of Federal Regulations unless otherwise indicated.

establishes water quality objectives, and contains implementation programs and policies to achieve those objectives for all waters addressed through the plan. In addition, the Basin Plan implements State Water Resources Control Board (State Water Board) Resolution No. 88-63, which established state policy that all waters, with certain exceptions, should be considered suitable or potentially suitable for municipal or domestic supply. Beneficial uses applicable to Dredger Cut and Sacramento-San Joaquin Delta are as follows:

Table 5. Basin Plan Beneficial Uses

Discharge Point	Receiving Water Name	Beneficial Use(s)
001	**Sacramento-San Joaquin Delta**	Existing: Municipal and domestic supply (MUN), agricultural supply and stock watering (AGR), industrial process water supply (PROC), industrial service supply (IND), water contact recreation (REC-1), other non-contact water recreation (REC-2), warm freshwater aquatic habitat (WARM), cold freshwater aquatic habitat (COLD), warm and cold fish migration habitat (MIGR), warm spawning habitat (SPAWN), wildlife habitat (WILD), and navigation (NAV). Intermittent: None Potential: None
003	**Underlying Groundwater**	Municipal and domestic supply (MUN), agricultural supply and stock watering (AGR), industrial process water supply (PROC), and industrial service supply (IND).

The Basin Plan includes a list of Water Quality Limited Segments (WQLSs), which are defined as "…those sections of lakes, streams, rivers or other fresh water bodies where water quality does not meet (or is not expected to meet) water quality standards even after the application of appropriate limitations for point sources (CFR 130, et seq.)." The Basin Plan also states, "Additional treatment beyond minimum federal standards will be imposed on dischargers to WQLSs. Dischargers will be assigned or allocated a maximum allowable load of critical pollutants so that water quality objectives can be met in the segment." The listing for the eastern portion of the Sacramento-San Joaquin Delta waterways is listed as a WQLS for diazinon, chlorpyrifos, organo-chlorine Group A pesticides, DDT, mercury, exotic species, and unknown toxicity in the 303(d) list of impaired water bodies. Requirements of this Order implement the Basin Plan.

I. **National Toxics Rule (NTR) and California Toxics Rule (CTR).** USEPA adopted the NTR on 22 December 1992, and later amended it on 4 May 1995, and 9 November 1999. About forty criteria in the NTR applied in California. On 18 May 2000, USEPA adopted the CTR. The CTR promulgated new toxics criteria for California and, in addition, incorporated the previously adopted NTR criteria that were applicable in the

state. The CTR was amended on 13 February 2001. These rules contain water quality criteria for priority pollutants.

J. **State Implementation Policy.** On 2 March 2000, the State Water Board adopted the *Policy for Implementation of Toxics Standards for Inland Surface Waters, Enclosed Bays, and Estuaries of California* (State Implementation Policy or SIP). The SIP became effective on 28 April 2000, with respect to the priority pollutant criteria promulgated for California by the USEPA through the NTR and to the priority pollutant objectives established by the Regional Water Board in the Basin Plan. The SIP became effective on 18 May 2000, with respect to the priority pollutant criteria promulgated by the USEPA through the CTR. The State Water Board adopted amendments to the SIP on 24 February 2005 that became effective on 13 July 2005. The SIP establishes implementation provisions for priority pollutant criteria and objectives and provisions for chronic toxicity control. Requirements of this Order implement the SIP.

K. **Compliance Schedules and Interim Requirements.** In general, an NPDES permit must include final effluent limitations that are consistent with CWA section 301 and with CFR Part 122.44(d). There are exceptions to this general rule. The State Water Board has concluded that where the Regional Water Board's Basin Plan allows for schedules of compliance and the Regional Water Board is newly interpreting a narrative standard, it may include schedules of compliance in the permit to meet effluent limits that implement a narrative standard. [See In the Matter of Waste Discharge Requirements for Avon Refinery (State Board Order WQ 2001-06 at pp. 53-55). See also Communities for a Better Environment (CBE) et al. v. State Water Resources Control Board, 34 Cal.Rptr.3d 396, 410 (2005).] The Basin Plan for the Sacramento and San Joaquin Rivers includes a provision that authorizes the use of compliance schedules in NPDES permits for water quality objectives that are adopted after the date of adoption of the Basin Plan, which was 25 September 1995 (See Basin Plan at page IV-16). Consistent with the State Water Board's Order in the CBE matter, the Regional Water Board has the discretion to include compliance schedules in NPDES permits when it is including an effluent limitation that is a "new interpretation" of a narrative water quality objective. This conclusion is also consistent with the USEPA's policies and administrative decisions. [See, e.g., Whole Effluent Toxicity (WET) Control Policy.] The Regional Water Board, however, is not required to include a schedule of compliance, but may issue a Time Schedule Order pursuant to CWC section 13300 or a Cease and Desist Order pursuant to CWC section 13301 where it finds that the discharger is violating or threatening to violate the permit. The Regional Water Board will consider the merits of each case in determining whether it is appropriate to include a compliance schedule in a permit, and, consistent with the Basin Plan, should consider feasibility of achieving compliance, and must impose a schedule that is as short as practicable to achieve compliance with the objectives, criteria, or effluent limit based on the objective or criteria.

For CTR constituents, Section 2.1 of the SIP provides that, based on a Discharger's request and demonstration that it is infeasible for an existing Discharger to achieve immediate compliance with an effluent limitation derived from a CTR criterion, compliance schedules may be allowed in an NPDES permit. Unless an exception has been granted under section 5.3 of the SIP, a compliance schedule may not exceed 5

years from the date that the permit is issued or reissued, nor may it extend beyond 10 years from the effective date of the SIP (or 18 May 2010) to establish and comply with CTR criterion-based effluent limitations. Where a compliance schedule for a final effluent limitation that exceeds 1 year, the Order must include interim numeric limitations for that constituent or parameter. Where allowed by the Basin Plan, compliance schedules and interim effluent limitations or discharge specifications may also be granted to allow time to implement a new or revised water quality objective. This Order includes compliance schedules and interim effluent limitations, and discharge specifications. A detailed discussion of the basis for the compliance schedules, interim effluent limitations, and discharge specifications is included in the Fact Sheet (Attachment F, Sections IV.E and F., and Section VII.B.7.).

L. Alaska Rule. On 30 March 2000, USEPA revised its regulation that specifies when new and revised state and tribal water quality standards (WQS) become effective for CWA purposes. (CFR § 131.21; 65 Fed. Reg. 24641 (27 April 2000).) Under the revised regulation (also known as the Alaska rule), new and revised standards submitted to USEPA after 30 May 2000, must be approved by USEPA before being used for CWA purposes. The final rule also provides that standards already in effect and submitted to USEPA by 30 May 2000, may be used for CWA purposes, whether or not approved by USEPA.

M. Stringency of Requirements for Individual Pollutants. This Order contains both technology-based and water quality-based effluent limitations for individual pollutants. The technology-based effluent limitations consist of restrictions on BOD_5 and TSS. The water quality-based effluent limitations consist of restrictions on turbidity and pathogens. This Order's technology-based pollutant restrictions implement the minimum, applicable federal technology-based requirements. In addition, this Order contains effluent limitations more stringent than the minimum, federal technology-based requirements that are necessary to meet water quality standards. These limitations are more stringent than required by the CWA. Specifically, this Order includes effluent limitations for BOD, TSS, turbidity and pathogens that are more stringent than applicable federal standards, but that are nonetheless necessary to meet numeric objectives or protect beneficial uses. The rationale for including these limitations is explained in the Fact Sheet (Attachment F, Sections IV.B. and C.3.). In addition, the Regional Water Board has considered the factors in CWC section 13241 in establishing these requirements.

Water quality-based effluent limitations have been scientifically derived to implement water quality objectives that protect beneficial uses. Both the beneficial uses and the water quality objectives have been approved pursuant to federal law and are the applicable federal water quality standards. To the extent that toxic pollutant water quality-based effluent limitations were derived from the CTR, the CTR is the applicable standard pursuant to CFR Part 131.38. The scientific procedures for calculating the individual water quality-based effluent limitations are based on the CTR-SIP, which was approved by USEPA on 1 May 2001. All beneficial uses and water quality objectives contained in the Basin Plan were approved under state law and submitted to and approved by USEPA prior to 30 May 2000. Any water quality objectives and beneficial uses submitted to USEPA prior to 30 May 2000, but not approved by USEPA before that date, are nonetheless "*applicable water quality standards for purposes of the*

[Clean Water] Act" pursuant to CFR Part 131.21(c)(1). Collectively, this Order's restrictions on individual pollutants are no more stringent than required to implement the technology-based requirements of the CWA and the applicable water quality standards for purposes of the CWA.

N. Antidegradation Policy. CFR Part 131.12 requires that the state water quality standards include an antidegradation policy consistent with the federal policy. The State Water Board established California's antidegradation policy in State Water Board Resolution No. 68-16. Resolution No. 68-16 is consistent with the federal antidegradation policy where the federal policy applies under federal law. Resolution No. 68-16 requires that existing quality of waters be maintained unless degradation is justified based on specific findings. The Regional Water Board's Basin Plan implements, and incorporates by reference, both the state and federal antidegradation policies. As discussed in detail in the Fact Sheet (Attachment F, Sections III.C.3. and IV.D.4.), the permitted discharge is consistent with the antidegradation provision of CFR Part 131.12 and State Water Board Resolution No. 68-16.

O. Anti-Backsliding Requirements. Sections 402(o)(2) and 303(d)(4) of the CWA and CFR Part 122.44(l) prohibit backsliding in NPDES permits. These anti-backsliding provisions require effluent limitations in a reissued permit to be as stringent as those in the previous permit, with some exceptions where limitations may be relaxed. Some effluent limitations in this Order are less stringent that those in the previous Order. As discussed in detail in the Fact Sheet (Attachment F, Sections III.C.4. and IV.D.3.), this relaxation of effluent limitations is consistent with the anti-backsliding requirements of the CWA and federal regulations.

P. Monitoring and Reporting. CFR Part 122.48 requires that all NPDES permits specify requirements for recording and reporting monitoring results. CWC sections 13267 and 13383 authorize the Regional Water Board to require technical and monitoring reports. The Monitoring and Reporting Program establishes monitoring and reporting requirements to implement federal and State requirements. This Monitoring and Reporting Program is provided in Attachment E.

Q. Standard and Special Provisions. Standard Provisions, which apply to all NPDES permits in accordance with CFR Part 122.41, and additional conditions applicable to specified categories of permits in accordance with CFR Part 122.42, are provided in Attachment D. The discharger must comply with all standard provisions and with those additional conditions that are applicable under CFR Part 122.42. The Regional Water Board has also included in this Order special provisions applicable to the Discharger. A rationale for the special provisions contained in this Order is provided in the attached Fact Sheet (Attachment F, Section VII.B).

R. Provisions and Requirements Implementing State Law. The provisions/requirements in subsections IV.B, IV.C, and V.B of this Order are included to implement state law only. These provisions/requirements are not required or authorized under the federal CWA; consequently, violations of these provisions/requirements are not subject to the enforcement remedies that are available for NPDES violations.

S. Notification of Interested Parties. The Regional Water Board has notified the Discharger and interested agencies and persons of its intent to prescribe Waste Discharge Requirements for the discharge and has provided them with an opportunity to submit their written comments and recommendations. Details of notification are provided in the Fact Sheet of this Order (Attachment F, section VIII).

T. Consideration of Public Comment. The Regional Water Board, in a public meeting, heard and considered all comments pertaining to the discharge. Details of the Public Hearing are provided in the Fact Sheet of this Order(Attachment F, section VIII).

III. DISCHARGE PROHIBITIONS

A. Discharge or application of waste at a location or in a manner different from that described in the Findings is prohibited.

B. Neither the treatment, storage, discharge, nor application of waste shall create a nuisance as defined in CWC Section 13050(m).

C. Discharge or application of waste classified as 'hazardous', as defined in CCR, Title 23, Section 2521(a), or 'designated', as defined in CWC Section 13173, is prohibited.

D. The Discharger shall not allow pollutant-free wastewater to be discharged into the collection, treatment, and disposal system in amounts that significantly diminish the system's capability to comply with this Order. Pollutant-free wastewater means rainfall, supplemental irrigation water, groundwater, cooling waters, or condensates that are essentially free of pollutants.

E. The by-pass or overflow of waste to surface waters or surface water drainage courses is prohibited, except as allowed by Federal Standard Provisions I.G. and I.H. (Attachment D).

F. Wastewater shall not be applied to areas other than agricultural fields 1A through 6G (As shown in Attachment C-2).

IV. EFFLUENT LIMITATIONS AND DISCHARGE SPECIFICATIONS

A. Effluent Limitations – Discharge Point 001

1. Final Effluent Limitations (7.0 mgd) – Discharge Point 001

Effective immediately, the Discharger shall maintain compliance with the following effluent limitations at Discharge Point 001, with compliance measured at Monitoring Location EFF-001 as described in the attached MRP (Attachment E):

a. The Discharger shall maintain compliance with the effluent limitations specified in Table 6:

Table 6. Effluent Limitations (7.0 mgd)

Parameter	Units	Effluent Limitations				
		Average Monthly	Average Weekly	Maximum Daily	Instantaneous Minimum	Instantaneous Maximum
BOD 5-day @ 20°C	mg/L	10	15	20	--	--
	lbs/day[1]	584	876	1168	--	--
Total Suspended Solids	mg/L	10	15	20	--	--
	lbs/day[1]	584	876	1168	--	--
Total Coliform	MPN/100 ml	--	--	--	--	240
Turbidity	NTU	--	--	--	--	10
pH	standard units	--	--	--	6.5	8.5
Aluminum (total recoverable)[2]	ug/L	66	--	155	--	--
Manganese	ug/L	--	--	50	--	--
Chlorodibromomethane[2]	ug/L	0.41	--	0.82	--	--
Dichlorobromomethane[2]	ug/L	0.56	--	1.1	--	--
Ammonia (as N)[2]	mg/L	1.3	--	4.3	--	--
	lbs/day[1]	75.9	--	251	--	--
Nitrate (as N)	mg/L	10	--	--	--	--
	lbs/day[1]	584	--	--	--	--
Nitrite (as N)	mg/L	1.0	--	--	--	--
	lbs/day[1]	58	--	--	--	--
Electrical Conductivity	umhos/cm	780	--	--	--	--

1 Based on a design flow of 7.0 mgd.

2 This Order includes interim effluent limitations for aluminum, ammonia, chlorodibromomethane, and dichlorobromomethane (section IV.A.4.a.). Effective immediately, the interim effluent limitations shall apply in lieu of the respective final effluent limitations. The final effluent limitations for aluminum become effective 18 May 2010, and the final effluent limitations for ammonia, chlorodibromomethane, and dichlorobromomethane become effective when the Discharger complies with Special Provisions VI.C.7.b. or 18 May 2010, whichever is sooner.

b. **Percent Removal:** The average monthly percent removal of BOD 5-day 20°C and total suspended solids shall not be less than 85 percent.

c. **Acute Whole Effluent Toxicity.** Survival of aquatic organisms in 96-hour bioassays of undiluted waste shall be no less than:

   i. 70%, minimum for any one bioassay; and
   ii. 90%, median for any three consecutive bioassays.

d. **Turbidity.** Effluent turbidity shall not exceed:

   i. 2 NTU, as a daily average; and
   ii. 5 NTU, more than 5% of the time within a 24-hour period.

e. **Total Coliform Organisms**. Effluent total coliform organisms shall not exceed:

   i. 2.2 most probable number (MPN) per 100 mL, as a 7-day median; and
   ii. 23 MPN/100 mL, more than once in any 30-day period.

f. **Temperature.** The maximum temperature of the discharge shall not exceed 86ºF.

g. **Average Daily Discharge Flow.** The Average Daily Discharge Flow shall not exceed 7.0 million gallons per day.

h. **Dissolved Oxygen.** The discharge of dissolved oxygen must meet or exceed 5 mg/L as a daily average.

2. Final Effluent Limitations (7.2 mgd) – Discharge Point 001

Effective upon acceptance of wastewater flows from the San Joaquin County Flag City Service Area, the permitted Average Daily Discharge flow is increased to 7.2 mgd. The discharge of treated wastewater shall maintain compliance with the effluent limitations at Discharge Point 001, with compliance measured at Monitoring Location EFF-001

a. The Discharger shall maintain compliance with the following effluent limitations specified in Table 7 below; these effluent limitations shall apply in lieu of the corresponding effluent limitations specified in Table 6 for the same parameters.

Table 7. Effluent Limitations (7.2 mgd)

Parameter	Units	Effluent Limitations				
		Average Monthly	Average Weekly	Maximum Daily	Instantaneous Minimum	Instantaneous Maximum
BOD 5-day @ 20°C	mg/L	10	15	20	--	--
	lbs/day[1]	601	901	1202	--	--
Total Suspended Solids	mg/L	10	15	20	--	--
	lbs/day[1]	601	901	1202	--	--
Ammonia (as N)	mg/L	1.3	--	4.3	--	--
	lbs/day[1]	78.1	--	258	--	--
Nitrate (as N)	mg/L	10	--	--	--	--
	lbs/day[1]	601	--	--	--	--
Nitrite (as N)	mg/L	1.0	--	--	--	--
	lbs/day[1]	60	--	--	--	--

1 Based on a design flow of 7.2 mgd.

b. **Average Daily Discharge Flow.** The Average Daily Discharge Flow shall not exceed 7.2 million gallons per day.

3. Final Effluent Limitations (8.5 mgd) – Discharge Point 001

Effective upon compliance with Special Provisions VI.C.7.b., the permitted Average Daily Discharge flow is increased to 8.5 mgd. The discharge of treated wastewater shall maintain compliance with the effluent limitations at Discharge Point 001, with compliance measured at Monitoring Location EFF-001

a. The Discharger shall maintain compliance with the following effluent limitations specified in Table 8 below; these effluent limitations shall apply in lieu of the corresponding effluent limitations specified in Table 6 for the same parameters.

Table 8. Effluent Limitations (8.5 mgd)

Parameter	Units	Effluent Limitations				
		Average Monthly	Average Weekly	Maximum Daily	Instantaneous Minimum	Instantaneous Maximum
BOD 5-day @ 20°C	mg/L	10	15	20	--	--
	lbs/day[1]	709	1063	1418	--	--
Total Suspended Solids	mg/L	10	15	20	--	--
	lbs/day[1]	709	1063	1418	--	--
Ammonia (as N)	mg/L	1.3	--	4.3	--	--
	lbs/day[1]	92.2	--	305	--	--
Nitrate (as N)	mg/L	10	--	--	--	--
	lbs/day[1]	709	--	--	--	--
Nitrite (as N)	mg/L	1.0	--	--	--	--
	lbs/day[1]	71	--	--	--	--

1 Based on a design flow of 8.5 mgd.

b. **Average Daily Discharge Flow.** The Average Daily Discharge Flow shall not exceed 8.5 million gallons per day.

4. Interim Effluent Limitations – Discharge Point 001

a. **Effective immediately and until 17 May 2010,** the Discharger shall maintain compliance with the following limitations in Table 9 at Discharge Point 001, with compliance measured at Monitoring Location EFF-001 as described in the attached MRP (Attachment E). These interim effluent limitations shall apply in lieu of the corresponding final effluent limitations specified in Final Effluent Limitations IV.A.1. Table 6 for the same parameters.

Table 9. Interim Effluent Limitation

Parameter	Units	Effluent Limitations				
		Average Monthly	Average Weekly	Maximum Daily	Instantaneous Minimum	Instantaneous Maximum
Aluminum	ug/L			224		
Ammonia	mg/L			25		
Chlorodibromomethane	ug/L			3.4		
Dichlorobromomethane	ug/L			3.7		

b. **Effective immediately**, the total monthly mass discharge of total mercury shall not exceed 0.113 pounds per month. This interim performance-based limitation shall be in effect until the Regional Water Board establishes final total mercury effluent limitations upon adoption of the Delta methylmercury TMDL.

B. Land Discharge Specifications – Discharge Point 003

The Discharger shall maintain compliance with the following land discharge specifications at Discharge Point 003, with compliance measured at Monitoring Location LND-001 as described in the attached MRP (Attachment E). Loading calculations shall be performed as specified in the attached MRP (Attachment E), Section X.B.6. All reports shall be prepared under the direct supervision of a certified agronomist and signed by the registered professional.

1. **Hydraulic Loading.** The hydraulic loading to any individual agricultural field (1A through 6G as shown in Attachment C-2) shall be at reasonable agronomic rates designed to minimize percolation of wastewater constituents below the evaporative and root zone (i.e., deep percolation).

2. **Total Nitrogen.** The total nitrogen loading to any individual agricultural field (1A through 6G as shown in Attachment C-2) shall not exceed the agronomic rate for plant available nitrogen (PAN) for the type of crop to be grown, as specified in the most recent edition of the Western Fertilizer Handbook. For biosolids application rates, the Discharger must calculate the PAN using the procedure, volatilization factors, and mineralization rates described in USEPA's G*uide for [Biosolids] Land Appliers* (EPA/831-B-03-002b).

3. **BOD_5. Effective 1 April 2009**, unless expressly authorized by the Executive Officer pursuant to Provision VI.C.2.g, the maximum BOD_5 loading to any individual agricultural field (1A through 6G as shown in Attachment C-2) shall not exceed any of the following:
   a. 100 lbs/acre/day as a cycle average; and
   b. The daily and cycle average loading rate that ensures compliance with Discharge Prohibition III.B and Groundwater Limitations V.B.

4. **Metals.** Wastewater applied to any agricultural field (1A through 6G as shown in Attachment C-2) shall not exceed the following cumulative metals loading limits:

Pollutant	CR (lbs/ac)
Arsenic	36
Cadmium	34
Copper	1336
Lead	267
Mercury	15
Molybdenum	16
Nickel	374
Selenium	89
Zinc	2494

5. **Secondary Treated Effluent Discharged to Ponds.** The Discharger shall maintain compliance with the following effluent limitations specified in Table 10, with compliance measured at Monitoring Location EFF-001 as described in the attached MRP (Attachment E).

Table 10. Secondary Treated Effluent Limitations

Parameter	Units	Effluent Limitations	
		Average Monthly	Maximum Daily
BOD 5-day @ 20°C	mg/L	40	80
Settleable Solids	mL/L	0.2	0.5

C. Reclamation Specifications – Discharge Points 002 and 003

1. Public contact with the reclaimed water shall be precluded or controlled through such means as fences, signs, and other acceptable alternatives.

2. All reclaimed water equipment, pumps, piping, valves, and outlets shall be appropriately marked to differentiate them from potable facilities, and these shall be of a type, or secured in a manner, that permits operation by authorized personnel only.

3. Reclaimed water shall be used in compliance with Title 22, Division 4, Chapter 3, Article 3, *Uses of Recycled Water* and this Order.

4. The Discharger shall also maintain compliance with the following reclamation specifications and effluent limitations at Discharge Point 002, with compliance measured at Monitoring Location EFF-001 as described in the attached MRP.

   a. **Tertiary Treated Effluent.** The Discharger shall treat the wastewater such that it complies with Title 22 CCR, Section 60301.230 ("Disinfected Tertiary Recycled Water") or equivalent.

   b. **Total Coliform Organisms**. Effluent total coliform organisms shall not exceed:
      i. 2.2 most probable number (MPN) per 100 mL, as a 7-day median;
      ii. 23 MPN/100 mL, more than once in any 30-day period; and
      iii. 240 MPN/100 mL for any single sample.

   c. **Turbidity.** Effluent turbidity shall not exceed any of the following:
      i. An average of 2 Nephelometric Turbidity Units (NTU) within a 24-hour period;
      ii. 5 NTU more than 5 percent of the time within a 24-hour period; and
      iii. 10 NTU at any time.

V. RECEIVING WATER LIMITATIONS

A. Surface Water Limitations

Receiving water limitations are based on water quality objectives contained in the Basin Plan and are a required part of this Order. The discharge shall not cause the following in Dredger Cut:

1. **Bacteria**. The fecal coliform concentration, based on a minimum of not less than five samples for any 30-day period, to exceed a geometric mean of 200 MPN/100 mL, nor more than ten percent of the total number of fecal coliform samples taken during any 30-day period to exceed 400 MPN/100 mL.

2. **Biostimulatory Substances**. Water to contain biostimulatory substances that promote aquatic growths in concentrations that cause nuisance or adversely affect beneficial uses.

3. **Chemical Constituents**. Chemical constituents to be present in concentrations that adversely affect beneficial uses.

4. **Color**. Discoloration that causes nuisance or adversely affects beneficial uses.

5. **Dissolved Oxygen.** The dissolved oxygen concentration to be reduced below 5.0 mg/L at any time.

6. **Floating Material**. Floating material to be present in amounts that cause nuisance or adversely affect beneficial uses.

7. **Pesticides**:

    a. Pesticides to be present, individually or in combination, in concentrations that adversely affect beneficial uses;
    b. Pesticides to be present in bottom sediments or aquatic life in concentrations that adversely affect beneficial uses;
    c. Total identifiable persistent chlorinated hydrocarbon pesticides to be present in the water column at concentrations detectable within the accuracy of analytical methods approved by USEPA or the Executive Officer.
    d. Pesticide concentrations to exceed those allowable by applicable antidegradation policies (see State Water Board Resolution No. 68-16 and CFR §131.12.).
    e. Pesticide concentrations to exceed the lowest levels technically and economically achievable.
    f. Pesticides to be present in concentration in excess of the maximum contaminant levels set forth in California Code of Regulations, Title 22, Division 4, Chapter 15.
    g. Thiobencarb to be present in excess of 1.0 ug/L.

8. **pH**. The pH to be depressed below 6.5 or raised above 8.5.

9. **Radioactivity**:

    a. Radionuclides to be present in concentrations that are harmful to human, plant, animal, or aquatic life nor that result in the accumulation of radionuclides in the food web to an extent that presents a hazard to human, plant, animal, or aquatic life.

    b. Radionuclides to be present in excess of the maximum contaminant levels specified in Table 4 (MCL Radioactivity) of Section 64443 of Title 22 of the

California Code of Regulations.

10. **Suspended Sediments**. The suspended sediment load and suspended sediment discharge rate of surface waters to be altered in such a manner as to cause nuisance or adversely affect beneficial uses.

11. **Settleable Substances**. Substances to be present in concentrations that result in the deposition of material that causes nuisance or adversely affects beneficial uses.

12. **Suspended Material**. Suspended material to be present in concentrations that cause nuisance or adversely affect beneficial uses.

13. **Taste and Odors**. Taste- or odor-producing substances to be present in concentrations that impart undesirable tastes or odors to fish flesh or other edible products of aquatic origin, or that cause nuisance, or otherwise adversely affect beneficial uses.

14. **Toxicity**. Toxic substances to be present, individually or in combination, in concentrations that produce detrimental physiological responses in human, plant, animal, or aquatic life.

B. Groundwater Limitations

1. Release of waste constituents from any portion of the Facility and The Agricultural Fields:

   a. Shall not unreasonably affect beneficial uses;

   b. Shall not cause a condition of pollution or nuisance; and

   c. Shall not cause the groundwater within influence of the Facility and The Agricultural Fields to contain waste constituents in concentrations greater than listed or in excess of natural background quality, whichever is greater. Note that natural background conditions have not yet been established, and therefore the following effluent limitations become effective when the Discharger complies with Special Provisions VI.C.2.d. of this Order:

Constituent	Units	Limitation
Boron	mg/L	0.7
Chloride	mg/L	106
Iron	mg/L	0.3
Lead	mg/L	0.015
Mercury	ug/L	2
Molybdenum	mg/L	0.01
Manganese	mg/L	0.05
Sodium	mg/L	69
Total Coliform Organisms	MPN/100 mL	<2.2
Total Dissolved Solids	mg/L	450

Constituent	Units	Limitation
Total Nitrogen	mg/L	10
Nitrite (as N)	mg/L	1
Nitrate (as N)	mg/L	10
Ammonia (as NH_4)	mg/L	1.5

VI. PROVISIONS

A. Standard Provisions

1. **Federal Standard Provisions.** The Discharger shall comply with all Standard Provisions included in Attachment D of this Order.

2. **Regional Water Board Standard Provisions.** The Discharger shall comply with the following provisions:

   a. If the Discharger's wastewater treatment facility is publicly owned or subject to regulation by California Public Utilities Commission, it shall be supervised and operated by persons possessing certificates of appropriate grade according to Title 23, CCR, Division 3, Chapter 26.

   b. After notice and opportunity for a hearing, this Order may be terminated or modified for cause, including, but not limited to:

      i. violation of any term or condition contained in this Order;

      ii. obtaining this Order by misrepresentation or by failing to disclose fully all relevant facts;

      iii. a change in any condition that requires either a temporary or permanent reduction or elimination of the authorized discharge; and

      iv. a material change in the character, location, or volume of discharge.

      The causes for modification include:

      - *New regulations.* New regulations have been promulgated under CWA Section 405(d), or the standards or regulations on which the permit was based have been changed by promulgation of amended standards or regulations or by judicial decision after the permit was issued.

      - *Land application plans.* When required by a permit condition to incorporate a land application plan for beneficial reuse of sewage sludge, to revise an existing land application plan, or to add a land application plan.

      - *Change in sludge use or disposal practice.* Under CFR Part 122.62(a)(1), a change in the Discharger's sludge use or disposal practice is a cause for

modification of the permit. It is cause for revocation and reissuance if the Discharger requests or agrees.

The Regional Water Board may review and revise this Order at any time upon application of any affected person or the Regional Water Board's own motion.

c. If a toxic effluent standard or prohibition (including any scheduled compliance specified in such effluent standard or prohibition) is established under Section 307(a) of the CWA, or amendments thereto, for a toxic pollutant that is present in the discharge authorized herein, and such standard or prohibition is more stringent than any limitation upon such pollutant in this Order, the Regional Water Board will revise or modify this Order in accordance with such toxic effluent standard or prohibition.

   The Discharger shall comply with effluent standards and prohibitions within the time provided in the regulations that establish those standards or prohibitions, even if this Order has not yet been modified.

d. This Order shall be modified, or alternately revoked and reissued, to comply with any applicable effluent standard or limitation issued or approved under Sections 301(b)(2)(C) and (D), 304(b)(2), and 307(a)(2) of the CWA, if the effluent standard or limitation so issued or approved:

   i. contains different conditions or is otherwise more stringent than any effluent limitation in the Order; or

   ii. controls any pollutant limited in the Order.

   The Order, as modified or reissued under this paragraph, shall also contain any other requirements of the CWA then applicable.

e. The provisions of this Order are severable. If any provision of this Order is found invalid, the remainder of this Order shall not be affected.

f. The Discharger shall take all reasonable steps to minimize any adverse effects to waters of the State or users of those waters resulting from any discharge or sludge use or disposal in violation of this Order. Reasonable steps shall include such accelerated or additional monitoring as necessary to determine the nature and impact of the non-complying discharge or sludge use or disposal.

g. The Discharger shall ensure compliance with any existing or future pretreatment standard promulgated by USEPA under Section 307 of the CWA, or amendment thereto, for any discharge to the municipal system.

h. The discharge of any radiological, chemical or biological warfare agent or high-level, radiological waste is prohibited.

i. A copy of this Order shall be maintained at the discharge facility and be available at all times to operating personnel. Key operating personnel shall be familiar with its content.

j. Safeguard to electric power failure:

   i. The Discharger shall provide safeguards to assure that, should there be reduction, loss, or failure of electric power, the discharge shall comply with the terms and conditions of this Order.

   ii. Upon written request by the Regional Water Board the Discharger shall submit a written description of safeguards. Such safeguards may include alternate power sources, standby generators, retention capacity, operating procedures, or other means. A description of the safeguards provided shall include an analysis of the frequency, duration, and impact of power failures experienced over the past five years on effluent quality and on the capability of the Discharger to comply with the terms and conditions of the Order. The adequacy of the safeguards is subject to the approval of the Regional Water Board.

   iii. Should the treatment works not include safeguards against reduction, loss, or failure of electric power, or should the Regional Water Board not approve the existing safeguards, the Discharger shall, within ninety days of having been advised in writing by the Regional Water Board that the existing safeguards are inadequate, provide to the Regional Water Board and USEPA a schedule of compliance for providing safeguards such that in the event of reduction, loss, or failure of electric power, the Discharger shall comply with the terms and conditions of this Order. The schedule of compliance shall, upon approval of the Regional Water Board, become a condition of this Order.

k. The Discharger, upon written request of the Regional Water Board, shall file with the Board a technical report on its preventive (failsafe) and contingency (cleanup) plans for controlling accidental discharges, and for minimizing the effect of such events. This report may be combined with that required under Regional Water Board Standard Provision VI.A.2.m.

   The technical report shall:

   i. Identify the possible sources of spills, leaks, untreated waste by-pass, and contaminated drainage. Loading and storage areas, power outage, waste treatment unit outage, and failure of process equipment, tanks and pipes should be considered.

   ii. Evaluate the effectiveness of present facilities and procedures and state when they became operational.

   iii. Predict the effectiveness of the proposed facilities and procedures and provide an implementation schedule containing interim and final dates when they will be constructed, implemented, or operational.

The Regional Water Board, after review of the technical report, may establish conditions which it deems necessary to control accidental discharges and to minimize the effects of such events. Such conditions shall be incorporated as part of this Order, upon notice to the Discharger.

l. A publicly owned treatment works (POTW) whose waste flow has been increasing, or is projected to increase, shall estimate when flows will reach hydraulic and treatment capacities of its treatment and disposal facilities. The projections shall be made in January, based on the last three years' average dry weather flows, peak wet weather flows and total annual flows, as appropriate. When any projection shows that capacity of any part of the facilities may be exceeded in four years, the Discharger shall notify the Regional Water Board by 31 January. A copy of the notification shall be sent to appropriate local elected officials, local permitting agencies and the press. Within 120 days of the notification, the Discharger shall submit a technical report showing how it will prevent flow volumes from exceeding capacity or how it will increase capacity to handle the larger flows. The Regional Water Board may extend the time for submitting the report.

m. The Discharger shall submit technical reports as directed by the Executive Officer. All technical reports required herein that involve planning, investigation, evaluation, or design, or other work requiring interpretation and proper application of engineering or geologic sciences, shall be prepared by or under the direction of persons registered to practice in California pursuant to California Business and Professions Code, sections 6735, 7835, and 7835.1. To demonstrate compliance with Title 16, CCR, sections 415 and 3065, all technical reports must contain a statement of the qualifications of the responsible registered professional(s). As required by these laws, completed technical reports must bear the signature(s) and seal(s) of the registered professional(s) in a manner such that all work can be clearly attributed to the professional responsible for the work.

n. Laboratories that perform sample analyses must be identified in all monitoring reports submitted to the Regional Water Board and USEPA.

o. The Discharger shall conduct analysis on any sample provided by USEPA as part of the Discharge Monitoring Quality Assurance (DMQA) program. The results of any such analysis shall be submitted to USEPA's DMQA manager.

p. Effluent samples shall be taken downstream of the last addition of wastes to the treatment or discharge works where a representative sample may be obtained prior to mixing with the receiving waters. Samples shall be collected at such a point and in such a manner to ensure a representative sample of the discharge.

q. All monitoring and analysis instruments and devices used by the Discharger to fulfill the prescribed monitoring program shall be properly maintained and calibrated as necessary, at least yearly, to ensure their continued accuracy.

r. The Discharger shall file with the Regional Water Board technical reports on self-monitoring performed according to the detailed specifications contained in the Monitoring and Reporting Program attached to this Order.

s. The results of all monitoring required by this Order shall be reported to the Regional Water Board, and shall be submitted in such a format as to allow direct comparison with the limitations and requirements of this Order. Unless otherwise specified, discharge flows shall be reported in terms of the monthly average and the daily maximum discharge flows.

t. The Regional Water Board is authorized to enforce the terms of this permit under several provisions of the CWC, including, but not limited to, sections 13385, 13386, and 13387.

u. Prior to making any change in the point of discharge, place of use, or purpose of use of treated wastewater that results in a decrease of flow in any portion of a watercourse, the Discharger must file a petition with the State Water Board, Division of Water Rights, and receive approval for such a change. (CWC section 1211)

v. In the event the Discharger does not comply or will be unable to comply for any reason, with any prohibition, maximum daily effluent limitation, 1-hour average effluent limitation, or receiving water limitation contained in this Order, the Discharger shall notify the Regional Water Board by telephone (916) 464-3291 within 24 hours of having knowledge of such noncompliance, and shall confirm this notification in writing within five days, unless the Regional Water Board waives confirmation. The written notification shall include the information required by Attachment D, Section V.E.1 [CFR Part 122.41(l)(6)(i)].

B. Monitoring and Reporting Program (MRP) Requirements

1. The Discharger shall comply with the MRP, and future revisions thereto, in Attachment E of this Order.

C. Special Provisions

1. Reopener Provisions

a. This Order may be reopened for modification, or revocation and reissuance, as a result of the detection of a reportable priority pollutant generated by special conditions included in this Order. These special conditions may be, but are not limited to, fish tissue sampling, whole effluent toxicity, monitoring requirements on internal waste stream(s), and monitoring for surrogate parameters. Additional requirements may be included in this Order as a result of the special condition monitoring data.

b. Conditions that necessitate a major modification of a permit are described in CFR Part 122.62, including:

i. If new or amended applicable water quality standards are promulgated or approved pursuant to Section 303 of the CWA, or amendments thereto, this permit may be reopened and modified in accordance with the new or amended standards.

ii. When new information, that was not available at the time of permit issuance, would have justified different permit conditions at the time of issuance.

c. **Mercury.** If mercury is found to be causing toxicity based on acute or chronic toxicity test results, or if a TMDL program is adopted, this Order shall be reopened and an effluent concentration limitation imposed. If the Regional Water Board determines that a mercury offset program is feasible for Dischargers subject to a NPDES permit, then this Order may be reopened to reevaluate the need for a mercury offset program for the Discharger.

d. **Whole Effluent Toxicity.** As a result of a Toxicity Reduction Evaluation (TRE), this Order may be reopened to include a chronic toxicity limitation, a new acute toxicity limitation, and/or a limitation for a specific toxicant identified in the TRE. Additionally, if the State Water Board revises the SIP's toxicity control provisions that would require the establishment of numeric chronic toxicity effluent limitations, this Order may be reopened to include a numeric chronic toxicity effluent limitation based on the new provisions.

e. **Water Effects Ratios (WER).** A default WER of 1.0 has been used in this Order for calculating CTR criteria for applicable priority pollutant inorganic constituents. If the Discharger performs studies to determine site-specific WERs, this Order may be reopened to modify the effluent limitations for the applicable inorganic constituents.

f. **Temperature Study**. This Order requires the Discharger to conduct a site-specific temperature study to determine compliance with the Basin Plan water quality objectives. Based upon the results of this study, this Order may be reopened to include temperature limitations or additional requirements.

g. **Industrial Influent Characterization Study.** This Order requires the Discharger to characterize the industrial influent to determine compliance with Basin Plan water quality objectives. The goal of the study is to identify any potential groundwater contamination issues, or not, from discharges of the untreated industrial wastewater to The Agricultural Fields. Based upon the results of this study, this Order may be reopened to include or modify effluent limitations, land application specifications, or additional requirements.

h. **Background Groundwater Assessment Study.** This Order requires the Discharger to characterize background groundwater quality to determine compliance with Basin Plan water quality objectives and the Antidegradation Policy. Based upon the results of this study, this Order may be reopened to modify groundwater limitations, land discharge specifications, or include additional requirements.

i. **Title 22 Engineering Report.** This Order requires the Discharger to prepare a Title 22 Engineering Report that reflects its current reclamation uses and operations. Based upon the results of this report, and determinations from Department of Health Services regarding Title 22 standards, this Order may be reopened to modify the limitations (effluent or groundwater), land discharge specifications, or include additional requirements.

j. **Mixing Zone Study.** Section 1.4.2.2 of the SIP requires the Discharger to submit receiving water mixing zone studies prior to allowing dilution credits for certain pollutants. Thus, the Discharger may elect, as a means of compliance, to conduct a mixing zone study to evaluate any available assimilative capacity in Dredger Cut. When requested, the Regional Water Board will review such studies and if warranted, may reopen this Order to modify effluent limitations or include additional requirements.

k. **Assessment of Salmonids and Early Fish Life Stages in White Slough**. This Order implements ammonia limits based on the documented presence of salmonids and early fish life stages in White Slough. However, a recent report (*Assessment of Water Temperatures and Characterization of Aquatic Biological Resources in Highline Canal and Downstream Water Bodies to Determine Appropriate Temperature Controls for the Flag City Wastewater Treatment Plant*, Robertson-Bryan, Inc. November 2006) indicated that the habitat of White Slough is not suitable for salmonid species. Therefore, should the National Oceanic & Atmospheric Administration (NOAA) support these recent findings, when requested, the Regional Water Board will review NOAA's determinations and if warranted, may reopen this Order to modify the ammonia effluent limitations.

l. **Land Discharge Organic Loading Study**. This Order requires the Discharger to conduct an Organic Loading Study. The goal of the study is to determine compliance with Prohibition III.B and to evaluate the appropriate maximum daily BOD loading limit. Based upon the results of this report, this Order may be reopened to modify the land discharge specifications, or include additional requirements.

m. **Pond Freeboard Evaluation Study.** This Order requires the Discharger to conduct a Pond Freeboard Evaluation Study. The goal of the study is to evaluate the stability of the berms, the potential for berm failure or overtopping, and the threat to cause undesirable reactions. Based upon the results of this report, this Order may be reopened to modify the land discharge specifications, or include additional requirements.

n. **Wintertime Irrigation Management Plan.** This Order requires the Discharger to develop a wintertime irrigation management plan to minimize or prevent adverse water quality impacts in the event the agricultural fields are inundated during a 100-year flood. This Order may be reopened to modify the land discharge specifications, or include additional requirements based on this management plan.

2. **Special Studies, Technical Reports and Additional Monitoring Requirements**

a. **Chronic Whole Effluent Toxicity.** For compliance with the Basin Plan's narrative toxicity objective, this Order requires the Discharger to conduct chronic whole effluent toxicity testing, as specified in the Monitoring and Reporting Program (Attachment E, Section V.). Furthermore, this Provision requires, if applicable, the Discharger to investigate the causes of, and identify corrective actions to reduce or eliminate effluent toxicity. If the discharge exceeds the toxicity numeric monitoring trigger established in this Provision, the Discharger is required to initiate a Toxicity Reduction Evaluation (TRE), in accordance with an approved TRE Work Plan, and to take actions to mitigate the impact of the discharge and prevent reoccurrence of toxicity. A TRE is a site-specific study conducted in a stepwise process to identify the source(s) of toxicity and the effective control measures for effluent toxicity. TREs are designed to identify the causative agents and sources of whole effluent toxicity, evaluate the effectiveness of the toxicity control options, and confirm the reduction in effluent toxicity. This Provision includes requirements for the Discharger to develop and submit a TRE Work Plan and includes procedures for accelerated chronic toxicity monitoring and TRE initiation.

i. **Toxicity Reduction Evaluation (TRE) Work Plan. Within 90 days of the effective date of this Order,** the Discharger shall submit to the Regional Water Board a TRE Work Plan for approval by the Executive Officer. The TRE Work Plan shall outline the procedures for identifying the source(s) of, and reducing or eliminating effluent toxicity. The TRE Work Plan must be developed in accordance with USEPA guidance[2] and be of adequate detail to allow the Discharger to immediately initiate a TRE as required in this Provision.

ii. **Accelerated Monitoring and TRE Initiation.** When the numeric toxicity monitoring trigger is exceeded during regular chronic toxicity monitoring, and the testing meets all test acceptability criteria, the Discharger shall initiate accelerated monitoring as required in the Accelerated Monitoring Specifications. WET testing results exceeding the monitoring trigger during accelerated monitoring demonstrates a pattern of toxicity and requires the Discharger to initiate a TRE to address the effluent toxicity.

iii. **Numeric Monitoring Trigger.** The numeric toxicity monitoring trigger is > **1 TUc** (where TUc = 100/NOEC). The monitoring trigger is not an effluent limitation; it is the toxicity threshold at which the Discharger is required to begin accelerated monitoring and initiate a TRE.

iv. **Accelerated Monitoring Specifications.** If the monitoring trigger is exceeded during regular chronic toxicity testing, within 14-days of notification by the laboratory of the test results, the Discharger shall initiate accelerated

[2] See Attachment F (Fact Sheet) Section VII.B.2.a. for a list of EPA guidance documents that must be considered in development of the TRE Workplan.

monitoring. Accelerated monitoring shall consist of four (4) chronic toxicity tests every two weeks using the species that exhibited toxicity. The following protocol shall be used for accelerated monitoring and TRE initiation:

a) If the results of four (4) consecutive accelerated monitoring tests do not exceed the monitoring trigger, the Discharger may cease accelerated monitoring and resume regular chronic toxicity monitoring. However, notwithstanding the accelerated monitoring results, if there is adequate evidence of a pattern of effluent toxicity, the Executive Officer may require that the Discharger initiate a TRE.

b) If the source(s) of the toxicity is easily identified (i.e. temporary plant upset), the Discharger shall make necessary corrections to the facility and shall continue accelerated monitoring until four (4) consecutive accelerated tests do not exceed the monitoring trigger. Upon confirmation that the effluent toxicity has been removed, the Discharger may cease accelerated monitoring and resume regular chronic toxicity monitoring.

c) If the result of any accelerated toxicity test exceeds the monitoring trigger and the source(s) of the toxicity are not easily identified as described in item b of this subsection, the Discharger shall cease accelerated monitoring and initiate a TRE to investigate the cause(s) of, and identify corrective actions to reduce or eliminate effluent toxicity. Within thirty (30) days of notification by the laboratory of the test results exceeding the monitoring trigger during accelerated monitoring, the Discharger shall submit a TRE Action Plan to the Regional Water Board including, at minimum:

   1) Specific actions the Discharger will take to investigate and identify the cause(s) of toxicity, including TRE WET monitoring schedule;
   2) Specific actions the Discharger will take to mitigate the impact of the discharge and prevent the recurrence of toxicity; and
   3) A schedule for these actions.

   Within sixty (60) days of notification by the laboratory of the test results, the Discharger shall submit to the Regional Water Board a TRE Work Plan for approval by the Executive Officer. The TRE Work Plan shall outline the procedures for identifying the source(s) of, and reducing or eliminating effluent toxicity. The TRE Work Plan must be developed in accordance with USEPA guidance[3].

b. **Temperature Study**. The Thermal Plan requires that a discharge shall not *i) exceed natural receiving water temperature by more than 20 °F; ii) create a zone, defined by water temperatures of more than 1 °F above natural receiving water temperature . . .; and iii) cause a surface temperature to rise greater than 4 °F above the natural temperature of the receiving waters at any time or place.* The

[3] See Attachment F (Fact Sheet) Section VII.B.2.a. for a list of EPA guidance documents that must be considered in development of the TRE Workplan.

Basin Plan also contains water quality objectives for temperature to protect the beneficial uses of the receiving water. Natural receiving water is defined as "*The temperature of the receiving water…unaffected by any elevated temperature waste discharge or irrigation return waters*", which typically is the upstream receiving water temperatures. However, since Discharge Point 001 is to the upstream end of Dredger Cut, a dead-end slough, there is no upstream flow to determine natural background conditions. Because of this, it is not possible to implement the Thermal Plan or Basin Plan objectives for temperature that addresses temperature changes based on the natural receiving water temperature. Thus, this Order requires the Discharger to conduct a site-specific temperature study to determine the appropriate temperature controls to protect the beneficial uses of the receiving water. This Order may be reopened to include effluent limitations or other requirements based upon the results of this temperature study. The Discharger must comply with the following time schedule:

Task	Compliance Date
Submit Workplan and Time Schedule	6 months following effective date of permit.
Begin Study	As specified in the approved study plan.
Complete Study	2 years after commencement of the study.
Submit Study Report	90 days after completion of the study.

c. **Industrial Influent Characterization Study.** To identify potential groundwater quality issues, the Discharger shall submit a monitoring study that characterizes the wastewater influent collected by its industrial line. The goal of the study is to isolate and characterize the primary unique components of the industrial influent, including: 1) industrial influent that contains discharges from Pacific Coast Producers (PCP) (during the irrigation season June through September), 2) industrial influent that only contains discharges from the remaining industrial users (Non-irrigation season, which excludes PCP's wastewater), and 3) industrial influent that contains the first-flush of off-site and on-site stormwater runoff. The study shall include monitoring of biochemical oxygen demand (BOD), Total Kjeldahl nitrogen, total nitrogen, sodium, total suspended solids, fixed dissolved solids, chloride, Total Coliform Organisms, boron, magnesium, total petroleum hydrocarbons (TPH), five fuel oxygenates, lead scavengers, and all constituents listed in Attachment H of this Order. The monitoring study must be conducted at least quarterly for the duration of no less than two years. After the first year of the study, if any constituent, classified in Attachment H as a Volatile Organic (p. H-1), Semi-volatile Organic (p. H-2), or Pesticide-PCBs (pp. H-3 and H-4), or any TPH, fuel oxygenate, or lead scavenger, was not detected in the industrial influent, then the Discharger may cease monitoring for that constituent(s) during the remainder of this study. Upon completion, the Discharger shall summarize the analytical results of the data collected and describe future monitoring to take place. This Order may be reopened to include additional groundwater limitations or requirements based upon the results of this study. The Discharger must comply with the following time schedule:

Task	Compliance Date
Submit Workplan and Time Schedule	6 months following effective date of permit.
Begin Study	As specified in the approved study plan.
Complete Study	No longer than 2 years after commencement of the study.
Submit Study Report	90 days after completion of the study.

d. **Background Groundwater Quality and Groundwater Degradation Assessment Study.** The Antidegradation Policy requires that a discharge will not result in water quality impacts that exceed applicable water quality objectives or background water quality unless the Discharger provides best practicable treatment or control of the discharge and it can be demonstrated that the degradation is to the maximum benefit of the people of the state. The Discharger's land application activities are a threat to groundwater quality. However, site-specific studies provided by the Discharger (Whitley, Burchett and Assoc. 1989; Saracino Kirby and Snow, 2000 and 2003, and WYA, September 2006) indicate complex seasonal and local gradient variances from regional data, as well as local deflections of groundwater flow. Thus, the Discharger's current monitoring well network is not adequate to fully characterize the background groundwater quality conditions within the vicinity of the Facility and the Agricultural Fields. Therefore, to determine compliance with Groundwater Limitations contained in this Order, and to evaluate whether the Discharger is meeting BPTC in accordance with the Antidegradation Policy, the Discharger must submit a study workplan and time schedule that describes the installation of the additional groundwater monitoring wells, and any other testing needed to effectively and fully characterize background groundwater quality as follows:

i. **Groundwater Monitoring Workplan.** To determine compliance with Section V.B. Groundwater Limitations, the groundwater monitoring network shall include a sufficient number of background monitoring wells and designated monitoring wells downgradient of every treatment, storage, and representative agricultural field (as shown in Attachment C-2) that does or may release waste constituents to groundwater. By **90 days from the effective date of the permit,** the Discharger shall submit a Groundwater Monitoring Work Plan prepared in accordance with, and including the items listed in Attachment I: *"Requirements for Monitoring Well Installation Workplans and Monitoring Well Installation Reports."* All monitoring wells shall comply with the appropriate standards as described in California Well Standards Bulletin 74-90 (June 1991) and Water Well Standards: State of California Bulletin 74-81 (December 1981), and any more stringent standards adopted by the Discharger or County pursuant to CWC section 13801.

ii. **Groundwater Water Quality Characterization.** The Discharger, after at least two years of monitoring, shall characterize natural background quality of monitored constituents in a technical report, to be submitted by **1 August 2010**. For each groundwater monitoring parameter/constituent identified in the Monitoring and Reporting Program, the report shall present a summary of monitoring data, calculation of the concentration in background monitoring wells (including data obtained prior to adoption of this Order), and a comparison of background groundwater quality to that in wells used to monitor the Facility and The Agricultural Fields. Determination of background quality

shall be made using the methods described in Title 27 California Code of Regulations Section 20415(e)(10), and shall be based on data from at least eight consecutive quarterly (or more frequent) groundwater monitoring events. For each monitoring parameter/constituent, the report shall compare measured concentrations for compliance monitoring wells with the calculated background concentration.

iii. **Best Practical Treatment or Control (BPTC)**. If the groundwater monitoring results show that the discharge of waste is threatening to cause or has caused groundwater to contain waste constituents in concentrations statistically greater than background water quality, then by **1 December 2010**, the Discharger shall submit a BPTC Evaluation Workplan that sets forth a scope and schedule for a systematic and comprehensive technical evaluation of each component of the Facility's waste management system to determine best practicable treatment or control for each waste constituent of concern. The workplan shall include a preliminary evaluation of each component of the waste management system and propose a time schedule for completing the comprehensive technical evaluation and subsequent modifications. The schedule to complete the evaluation shall be as short as practicable but in no case shall completion of the necessary modifications exceed four years past the Executive Officer's determination of the adequacy of the comprehensive technical evaluation, unless the schedule is reviewed and specifically approved by the Regional Water Board. The technical report shall include specific methods the Discharger proposes as a means to measure processes and assure continuous optimal performance of BPTC measures.

e. **Title 22 Engineering Report.** Pursuant to Title 22 Section 60323, the Discharger shall prepare a Title 22 Engineering Report that reflects its current reclamation uses and operations. The report shall be prepared in accordance with the information listed in Department of Health Services (DHS) March 2001 document "*Guidelines for the Preparation of an Engineering Report for the Production, Distribution, and Use of Recycled Water."* (See Attachment G of this Order) The report shall be submitted to DHS and the Regional Water Board for review and approval. The report shall be completed in conformance with the following schedule.

Task	Compliance Date
Submit Workplan and Time Schedule	No later than 6 months from effective date of permit
Submit Draft Report	No later than 2 years from effective date of permit
Submit Final Report	6 months following approval of the Draft Report

f. **Effluent and Receiving Water Characterization Study.** An effluent and receiving water monitoring study is required to ensure adequate information is available for the next permit renewal. During the third year of the permit term, the Discharger shall conduct quarterly monitoring of the effluent at EFF-001 and of the receiving water at RSW-005. The Discharger shall monitor for all priority pollutants and other constituents of concern as described in Attachment H. The report shall be completed in conformance with the following schedule.

Task	Compliance Date
Submit Workplan and Time Schedule	No later than 2 years 6 months from adoption of the permit
Conduct quarterly monitoring	During third year of permit term
Submit Final Report	6 months following completion of final quarterly monitoring event

g. **Land Discharge Organic Loading Study.** An organic loading study is required to evaluate the need for a maximum daily BOD_5 loading rate. The Discharger shall conduct a study that evaluates the maximum daily BOD loading rate necessary to comply with Prohibition III.B of this Order. The test area must be part of the land application areas regulated under this Order, and the total area shall not exceed 20 acres. The test site shall be selected to a) minimize the proximity to occupied residences, and b) be representative of the soil and groundwater conditions at the land application sites.

Within this same test area, the Discharger may also conduct a study to evaluate the site-specific cycle average BOD loading limit that prevents 1) odorous anaerobic conditions, 2) incomplete removal of organics in the soil profile, 3) mobilization of iron, manganese, and other compounds, or 4) increases in bicarbonate in the soil solution via carbon dioxide conditions.

For the purpose of the study only, the Executive Officer may temporarily waive one or more of the Land Discharge Specifications in Section IV.B. of this Order, or Discharge Prohibitions III.A or B for the study test area only.

The Discharger shall submit quarterly reports that include, at a minimum, waste characterization, analytical monitoring results, summary of the findings, and discussion of future monitoring and assessments to take place. Upon completion, the Discharger shall summarize the analytical results of the data and findings, and if a numerical model was used, the report must also include a thorough description of the model, field testing validation, calibration to actual observed conditions, analysis of applicability to the site, limitations of the model, and error analysis. The Discharger must also develop a Land Application Organic Monitoring Work Plan Report that specifies and justifies the proposed sampling and testing program and, if applicable, the modeling approach.

This Order may be reopened to revise or include additional land discharge loading limitations or requirements based upon the results of this study. The Discharger must comply with the following time schedule:

Task	Compliance Date
Submit Workplan and Time Schedule	6 months following effective date of permit.
Begin Study	As specified in the approved study plan.
Complete Study	No longer than 2 years after commencement of the study.
Submit Study Reports	90 days after completion of the study.

h. **Pond Freeboard Evaluation Study**. A freeboard requirement is typically necessary to prevent berm failures or overtopping due to wave actions. The

Discharger's monthly monitoring reports indicate that the storage ponds, at times, have had less than a 2-foot freeboard. The previous permit did not contain the pond operation requirement to maintain any wastewater pond freeboard. This Order requires the Discharger to conduct a pond freeboard evaluation study.

At a minimum, the Discharger shall conduct a study that evaluates the stability of the pond berms, the risk for undesirable reactions caused by berm failure or pond overtopping, the need to implement mitigation or control measures necessary to prevent undesirable risk, and also shall determine an adequate freeboard that prevents undesirable risks. Upon completion of the study, the Discharger shall submit a report that summarizes findings, presents recommendations, and includes all support data and documentation.

The Discharger shall submit quarterly reports that include, at a minimum, summary of the findings, and discussion of future monitoring and assessments to take place.

This Order may be reopened to revise or include additional land discharge loading limitations or requirements based upon the results of this study. The Discharger must comply with the following time schedule:

Task	Compliance Date
Submit Workplan and Time Schedule	1 year following effective date of permit.
Begin Study	As specified in the approved study plan.
Complete Study	No longer than 2 years after commencement of the study.
Submit Study Report	90 days after completion of the study.

3. Best Management Practices and Pollution Prevention

a. **Pollution Prevention Plan for Mercury.** The Discharger shall prepare and implement a pollution prevention plan for mercury in accordance with CWC section 13263.3(d)(3). The minimum requirements for the pollution prevention plan are outlined in the Fact Sheet, Attachment F, Section VII.B.3.a. A work plan and time schedule for preparation of the pollution prevention plan shall be completed and submitted **within one (1) year of the effective date of this Order** for approval by the Executive Officer. The Pollution Prevention Plan shall be completed and submitted to the Regional Water Board **within two (2) years following work plan approval by the Executive Officer**, and progress reports shall be submitted in accordance with the Monitoring and Reporting Program (Attachment E, Section X.D.1.). The Pollution Prevention Plan required herein is not incorporated by reference into this Order.

b. **Salinity Evaluation and Minimization Plan.** The Discharger shall prepare a salinity evaluation and minimization plan to address sources of salinity and shall provide annual reports demonstrating reasonable progress in the reduction of salinity in its discharge to Dredger Cut and The Agricultural Fields. The plan shall be completed and submitted to the Regional Water Board **within (1) year of the effective date of this Order** for approval by the Executive Officer. The annual

reports shall be submitted in accordance with the Monitoring and Reporting Program (Attachment E, Section X.D.1.).

c. **Wintertime Irrigation Management Plan.** Approximately half of the Discharger's agricultural fields (as shown in Attachment C) are located within the 100-year flood plain and are not protected from inundation during a 100-year flood event. Winter crops are grown in these areas and may be irrigated with wastewater during the winter. Therefore, there is the risk of adverse water quality impacts during flooding. The Discharger shall prepare and implement a wintertime irrigation management plan that minimizes water quality impacts during flooding events. The management plan shall include land application operations and management practices that will minimize or prevent washout of wastewater or biosolids during 100-year flood events. The Discharger must comply with the following time schedule:

Task	Compliance Date
Submit Workplan and Time Schedule	6 months following effective date of permit.
Submit Plan	6 months following approval of the workplan and time schedule.

4. Construction, Operation and Maintenance Specifications

a. **Pond Operating Requirements.**

i. Ponds shall be managed to prevent breeding of mosquitoes. In particular,

a) An erosion control program should assure that small coves and irregularities are not created around the perimeter of the water surface.
b) Weeds shall be minimized.
c) Dead algae, vegetation, and debris shall not accumulate on the water surface.

ii. Objectionable odors originating at this facility shall not be perceivable beyond the limits of the wastewater treatment and disposal areas (or property owned by the Discharger).

iii. As a means of discerning compliance with Pond Operating Requirements a.ii., the dissolved oxygen content in the upper zone (1 foot) of wastewater in the ponds shall not be less than 1.0 mg/L.

iv. Ponds shall not have a pH less than 6.5 or greater than 9.0.

5. Special Provisions for Municipal Facilities (POTWs Only)

a. **Pretreatment Requirements.**

i. The Discharger shall implement its approved pretreatment program and the program shall be an enforceable condition of this Order. If the Discharger fails to perform the pretreatment functions, the Regional Water Board, the

State Water Board, or the USEPA may take enforcement actions against the Discharger as authorized by the CWA.

ii. The Discharger shall enforce the Pretreatment Standards promulgated under CWA sections 307(b), 307(c), and 307(d). The Discharger shall perform the pretreatment functions required by CFR Part 403 including, but not limited to:

a) Adopting the legal authority required by CFR Part 403.8(f)(1);

b) Enforcing the Pretreatment Standards of CFR Part 403.5 and Part 403.6;

c) Implementing procedures to ensure compliance as required by CFR Part 403.8(f)(2); and

d) Providing funding and personnel for implementation and enforcement of the pretreatment program as required by CFR Part 403.8(f)(3).

iii. The Discharger shall implement, as more completely set forth in CFR Part 403.5, the necessary legal authorities, programs, and controls to ensure that the following incompatible wastes are not introduced to the treatment system, where incompatible wastes are:

a) Wastes which create a fire or explosion hazard in the treatment works;

b) Wastes which will cause corrosive structural damage to treatment works, but in no case wastes with a pH lower than 5.0, unless the works is specially designed to accommodate such wastes;

c) Solid or viscous wastes in amounts which cause obstruction to flow in sewers, or which cause other interference with proper operation or treatment works;

d) Any waste, including oxygen demanding pollutants (BOD, *etc*.), released in such volume or strength as to cause inhibition or disruption in the treatment works, and subsequent treatment process upset and loss of treatment efficiency;

e) Heat in amounts that inhibit or disrupt biological activity in the treatment works, or that raise influent temperatures above 40°C (104°F), unless the Regional Water Board approves alternate temperature limits;

f) Petroleum oil, non-biodegradable cutting oil, or products of mineral oil origin in amounts that will cause interference or pass through;

g) Pollutants which result in the presence of toxic gases, vapors, or fumes within the treatment works in a quantity that may cause acute worker health and safety problems; and:

h) Any trucked or hauled pollutants, except at points predesignated by the Discharger.

iv. The Discharger shall implement, as more completely set forth in CFR Part 403.5, the legal authorities, programs, and controls necessary to ensure that indirect discharges do not introduce pollutants into the sewerage system that, either alone or in conjunction with a discharge or discharges from other sources:

a) Flow through the system to the receiving water in quantities or concentrations that cause a violation of this Order, or:

b) Inhibit or disrupt treatment processes, treatment system operations, or sludge processes, use, or disposal and either cause a violation of this Order or prevent sludge use or disposal in accordance with this Order.

b. **Sludge/Biosolids Treatment or Disposal Specifications**

i. Sludge and solid waste shall be removed from screens, sumps, ponds, clarifiers, etc. as needed to ensure optimal plant performance.

ii. Collected screenings, residual sludge, biosolids, and other solids removed from liquid wastes shall be disposed of in a manner approved by the Executive Officer, and consistent with *Consolidated Regulations for Treatment, Storage, Processing, or Disposal of Solid Waste,* as set forth in Title 27, CCR, Division 2, Subdivision 1, section 20005, et seq. Removal for further treatment, disposal, or reuse at sites (i.e., landfill, composting sites, soil amendment sites) that are operated in accordance with valid waste discharge requirements issued by a regional water quality control board will satisfy these specifications.

iii. The use and disposal of biosolids shall comply with existing Federal and State laws and regulations, including permitting requirements and technical standards included in CFR Part 503. If the State Water Board and the Regional Water Board are given the authority to implement regulations contained in CFR Part 503, this Order may be reopened to incorporate appropriate time schedules and technical standards. The Discharger must comply with the standards and time schedules contained in CFR Part 503 whether or not they have been incorporated into this Order.

iv. Any proposed change in biosolids use or disposal practice from a previously approved practice shall be reported to the Executive Officer and USEPA Regional Administrator at least **90 days** in advance of the change.

c. **Biosolids Storage Requirements**

i. Facilities for the storage of biosolids shall be located, designed and maintained to restrict public access to biosolids.

ii. Biosolids storage facilities shall be designed and maintained to prevent washout or inundation from a storm or flood with a return frequency of 100 years.

iii. The storage of biosolids, residual sludge, and solid waste on the Facility property shall be temporary and controlled, and contained in a manner that minimizes leachate formation and precludes infiltration of waste constituents into soils in a mass or concentration that will violate Groundwater Limitations V.B.

d. **The Agricultural Fields' Area Specifications**

i. Areas irrigated with wastewater shall be managed to prevent breeding of mosquitoes and other vectors. More specifically:

a) The discharge of wastewater to, or stormwater within, any agricultural field (As shown in Attachment C-2) must infiltrate completely, or be returned to the Facility's storage ponds as tailwater within 24 hours.

b) Ditches shall be maintained essentially free of emergent, marginal, and floating vegetation.

c) Low-pressure and un-pressurized pipelines and ditches, which are accessible to mosquitoes, shall not be used to store wastewater.

ii. The Discharger shall provide and maintain the following setbacks for all The Agricultural Fields (As shown in Attachment C-2):

a) A 50-foot buffer zone between The Agricultural Fields and all property boundaries.

b) A 100-foot buffer zone between any spring, domestic well or irrigation well and the wetted area produced during irrigation of wastewater.

c) The irrigation system shall be designed and managed to ensure even application of wastewater over any agricultural field (As shown in Attachment C-2) and to minimize erosion.

iii. Biosolids may not be applied, to any agricultural field 24 hours before forecasted precipitation, during periods of precipitation, and for at least 24 hours after cessation of precipitation, or when soils are saturated.

iv. Wastewater may not be used for irrigation purposes during periods of significant precipitation, and for at least 24 hours after cessation of signification precipitation, or when soils are saturated. Significant rainfall is defined as 0.25 inches during a 24-hr period.

v. All tailwater returns and runoff control systems must be fully functional prior to irrigation with wastewater.

vi. The Discharger is encouraged to comply with the "Manual of Good Practice for Agricultural Land Application of Biosolids" developed by the California Water Environment Association.

e. **Collection System.** On 2 May 2006, the State Water Board adopted State Water Board Order 2006-0003, a Statewide General WDR for Sanitary Sewer Systems. The Discharger shall be subject to the requirements of Order 2006-0003 and any future revisions thereto. Order 2006-0003 requires that all public agencies that currently own or operate sanitary sewer systems apply for coverage under the General WDR. The Discharger has applied for and has been approved for coverage under State Water Board Order 2006-0003 for operation of its wastewater collection system.

Regardless of the coverage obtained under Order 2006-0003, the Discharger's collection system is part of the treatment system that is subject to this Order. As such, pursuant to federal regulations, the Discharger must properly operate and maintain its collection system [CFR Part 122.41(e)], report any non-compliance [CFR Parts 122.41(l)(6) and (7)], and mitigate any discharge from the collection system in violation of this Order [CFR Part 122.41(d)].

6. Other Special Provisions

a. Wastewater discharged to Dredger Cut shall be oxidized, coagulated, filtered, and adequately disinfected pursuant to the DHS reclamation criteria, California Code of Regulations, Title 22, Division 4, Chapter 3, or equivalent.

b. The treatment and storage facilities shall be designed, constructed, operated, and maintained to prevent inundation or washout due to floods with a 100-year return frequency

c. In the event of any change in control or ownership of land or waste discharge facilities presently owned or controlled by the Discharger, the Discharger shall notify the succeeding owner or operator of the existence of this Order by letter, a copy of which shall be immediately forwarded to the Regional Water Board.

To assume operation under this Order, the succeeding owner or operator must apply in writing to the Executive Officer requesting transfer of the Order. The request must contain the requesting entity's full legal name, the state of incorporation if a corporation, address and telephone number of the persons responsible for contact with the Regional Water Board, and a statement. The statement shall comply with the signatory and certification requirements in the Federal Standard Provisions (Attachment D, Section V.B.) and state that the new owner or operator assumes full responsibility for compliance with this Order. Failure to submit the request shall be considered a discharge without requirements, a violation of the California Water Code. Transfer shall be approved or disapproved in writing by the Executive Officer.

7. Compliance Schedules

a. **Compliance Schedules for Final Effluent Limitations for aluminum, ammonia, chlorodibromomethane, and dichlorobromomethane.**

i. **By 18 May 2010,** the Discharger shall comply with the final effluent limitations for aluminum, ammonia, chlorodibromomethane, and dichlorobromomethane. On 1 February 2007, the Discharger submitted a compliance schedule justification for aluminum, ammonia, chlorodibromomethane, and dichlorobromomethane. The compliance schedule justification included all items specified in Paragraph 3, items (a) through (d), of section 2.1 of the SIP. As this compliance schedule is greater than one year, the Discharger shall submit semi-annual progress reports in accordance with the Monitoring and Reporting Program (Attachment E, Section X.D.1.)

ii. **Corrective Action Plan/Implementation Schedule.** To assure compliance with the final effluent limitations, the Discharger shall submit to the Regional Water Board a corrective action plan and implementation schedule for aluminum, ammonia, chlorodibromomethane, and dichlorobromomethane **within one (1) year of the effective date of this Order.**

iii. **Pollution Prevention Plan.** The Discharger shall prepare and implement a pollution prevention plan for aluminum, chlorodibromomethane, and dichlorobromomethane, in accordance with CWC section 13263.3(d)(3). Ammonia cannot be significantly reduced through source control measures in municipal wastewater, and therefore, a pollution prevention plan for ammonia is not required by this Order. The minimum requirements for the pollution prevention plan are outlined in the Fact Sheet, Attachment F, Section VII.B.3.c. A work plan and time schedule for preparation of the pollution prevention plan shall be completed and submitted to the Regional Water Board **within one (1) year of the effective date of this Order** for approval by the Executive Officer. The Pollution Prevention Plan shall be completed and submitted to the Regional Water Board **within two (2) years following work plan approval by the Executive Officer**, and progress reports shall be submitted in accordance with the Monitoring and Reporting Program (Attachment E, Section X.D.1.). The Pollution Prevention Plans required herein are not incorporated by reference into this Order.

iv. **Treatment Feasibility Study.** The Discharger is required to perform an engineering treatment feasibility study examining the feasibility, costs and benefits of different treatment options that may be required to remove aluminum, ammonia, chlorodibromomethane, and dichlorobromomethane from the discharge. A work plan and time schedule for preparation of the treatment feasibility study shall be completed and submitted to the Regional Water Board **within one (1) year of the effective date of this Order** for approval by the Executive Officer. The treatment feasibility study shall be completed and submitted to the Regional Water Board **within two (2) years following work plan approval by the Executive Officer**, and progress reports shall be submitted in accordance with the Monitoring and Reporting Program (Attachment E, Section X.D.1.).

b. **Phase III Improvements.** The Discharger has requested an expansion of allowable flows to be discharged to Dredger Cut. The permitted average daily discharge flow may increase to 8.5 mgd upon compliance with the following conditions:

i. **Effluent and Receiving Water Limitation Compliance.** The discharge shall demonstrate compliance with Effluent Limitations IV.A. (except for the final limitations for Aluminum) and Receiving Surface Water Limitations V.A.

ii. **Facility Improvements.** The Discharger shall have completed construction of Phase III improvements, as identified in the Fact Sheet (Attachment F, Section II.E).

iii. **Request for Increase.** The Discharger shall submit to the Regional Water Board a request for an increase in the permitted discharge flow rate, which demonstrates compliance with items i. through iii. of this provision. The increase in the permitted discharge flow rate shall not be effective until the Executive Officer verifies compliance with Special Provisions VI.C.7.b. and approves the Discharger's request.

VII. COMPLIANCE DETERMINATION

Compliance with the effluent limitations and discharge specifications contained in section IV of this Order will be determined as specified below:

A. **BOD and TSS Effluent Limitations**. Compliance with the final effluent limitations for BOD and TSS required in sections IV.A.1.a and 2.a shall be ascertained by 24-hour composite samples. Compliance with effluent limitations IV.A.1.b. for percent removal shall be calculated using the arithmetic mean of 20°C BOD (5-day), and total suspended solids, in effluent samples collected over a monthly period as a percentage of the arithmetic mean of the values for influent samples collected at approximately the same times during the same period.

B. **Aluminum Effluent Limitations (Sections IV.A.1. and 3.b.)**. Compliance with the effluent limitations (final or interim) for aluminum can be demonstrated using either total or acid-soluble (inductively coupled plasma/atomic emission spectrometry or inductively coupled plasma/mass spectrometry) analysis methods, as supported by USEPA's Ambient Water Quality Criteria for Aluminum document (EPA 440/5-86-008), or other standard methods that exclude aluminum silicate particles as approved by the Executive Officer.

C. **Total Coliform Organisms Effluent Limitations (Sections IV.A.1.a. and e.)**. For each day that an effluent sample is collected and analyzed for total coliform organisms, the 7-day median shall be determined by calculating the median concentration of total coliform bacteria in the effluent utilizing the bacteriological results of the last seven days for which analyses have been completed. If the 7-day median of total coliform organisms exceeds a most probable number (MPN) of 2.2 per 100 milliliters, the Discharger will be considered out of compliance for that parameter for that 1 day only within the reporting period.

D. **Total Mercury Mass Loading Effluent Limitations.** The procedures for calculating mass loadings are as follows:

1. The total pollutant mass load for each individual calendar month shall be determined using an average of all concentration data collected that month and the corresponding total monthly flow. All monitoring data collected under the monitoring and reporting program, pretreatment program and any special studies shall be used for these calculations.
2. In calculating compliance, the Discharger shall count all non-detect measures at one-half of the detection level. If compliance with the effluent limitation is not attained due to the non-detect contribution, the Discharger shall improve and implement available analytical capabilities and compliance shall be evaluated with consideration of the detection limits.

E. **Land Discharge Loading Limits (Section IV.B.)**. The Discharger shall perform the following calculations during all months when land application occurs.

1. **Total Nitrogen (Section IV.B.2)**. The Total Nitrogen loading rate shall be calculated for each irrigation field (As shown in Attachment C-2) on a monthly basis using the daily applied volume of wastewater, the most recent effluent monitoring results, and the daily application area. Loading rates for supplemental nitrogen (e.g. fertilizers), when applicable, shall be calculated and included in the total nitrogen loading rate for each irrigation field on a monthly basis using the actual daily applied load and the estimated daily application area. The cumulative nitrogen loading rate for each irrigation field for the calendar year to date shall be calculated as a running total of monthly loadings to date from all sources.

2. **20ºC Biological Oxygen Demand, 5-day (BOD_5) (Section IV.B.3.)**. BOD_5 loading rates shall be calculated for each irrigation field. For compliance determination, the cycle average BOD_5 loading rates shall be calculated using the total volume applied on the day of application, the number of days between applications, the total application period, application area, and a running average of the three most recent results of BOD_5 for the applicable source wastewater. When reporting, include the daily BOD_5 loading rates, which shall be calculated using the total volume applied on the day of application, estimated application area, and a running average of the three most recent results of BOD_5 for the applicable source water.

3. **Metals (Section IV.B.4.).** Cumulative metals loading rates shall be calculated for each irrigation field (As shown in Attachment C-2) on a monthly basis using the daily applied volume of wastewater, the most recent effluent monitoring results, and the daily application area. The cumulative metal(s) loading rate for each irrigation field for the calendar year to date shall be calculated as a running total of monthly loadings to date for each metal.

F. **Mass Effluent Limitations.** Compliance with the mass effluent limitations will only be determined during average dry weather periods when groundwater is at or near normal and runoff is not occurring.

G. **Average Daily Discharge Flow Effluent Limitations**. The Average Daily Discharge Flow represents the daily average flow when groundwater is at or near normal and runoff is not occurring. Compliance with the Average Daily Discharge Flow effluent limitations will be determined annually based on the average daily flow over three consecutive dry weather months (e.g. July, August, and September).

ATTACHMENT A – DEFINITIONS

Acute Toxic Unit (TU_a): the reciprocal of the effluent concentration that causes 50 percent of the organisms to die in an acute toxicity test ($TU_a = 100/LC_{50}$) (see LC_{50})

Average Monthly Effluent Limitation (AMEL): the highest allowable average of daily discharges over a calendar month, calculated as the sum of all daily discharges measured during a calendar month divided by the number of daily discharges measured during that month.

Average Weekly Effluent Limitation (AWEL): the highest allowable average of daily discharges over a calendar week (Sunday through Saturday), calculated as the sum of all daily discharges measured during a calendar week divided by the number of daily discharges measured during that week.

Best Practicable Treatment or Control (BPTC): BPTC is a requirement of State Water Resources Control Board Resolution 68-16 – "Statement of Policy with Respect to Maintaining High Quality of Waters in California" (referred to as the "Antidegradation Policy"). BPTC is the treatment or control of a discharge necessary to assure that, *"(a) a pollution or nuisance will not occur and (b) the highest water quality consistent with maximum benefit to the people of the State will be maintained."* Pollution is defined in CWC Section 13050(l). In general, an exceedance of a water quality objective in the Basin Plan constitutes "pollution".

Biosolids: sludge that has been treated and tested and shown to be capable of being beneficially and legally used pursuant to federal and State regulations as a soil amendment for agriculture, silviculture, horticulture, and land reclamation activities.

Coefficient of Variation (*CV*) is a measure of the data variability and is calculated as the estimated standard deviation divided by the arithmetic mean of the observed values.

Daily Discharge is defined as either: (1) the total mass of the constituent discharged over the calendar day (12:00 am through 11:59 pm) or any 24-hour period that reasonably represents a calendar day for purposes of sampling (as specified in the permit), for a constituent with limitations expressed in units of mass or; (2) the unweighted arithmetic mean measurement of the constituent over the day for a constituent with limitations expressed in other units of measurement (e.g., concentration).

The daily discharge may be determined by the analytical results of a composite sample taken over the course of one day (a calendar day or other 24-hour period defined as a day) or by the arithmetic mean of analytical results from one or more grab samples taken over the course of the day.

For composite sampling, if 1 day is defined as a 24-hour period other than a calendar day, the analytical result for the 24-hour period will be considered as the result for the calendar day in which the 24-hour period ends.

Detected, but Not Quantified (DNQ) are those sample results less than the Reporting Level (see RL), but greater than or equal to the laboratory's Method Detection Level (see MDL).

Dilution Credit is the amount of dilution granted to a discharge in the calculation of a water quality-based effluent limitation, based on the allowance of a specified mixing zone. It is calculated from the dilution ratio or determined through conducting a mixing zone study or modeling of the discharge and receiving water.

Effluent Concentration Allowance (ECA) is a value derived from the water quality criterion/objective, dilution credit, and ambient background concentration that is used, in conjunction with the coefficient of variation for the effluent monitoring data, to calculate a long-term average (LTA) discharge concentration. The ECA has the same meaning as waste load allocation (WLA) as used in USEPA guidance (Technical Support Document For Water Quality-based Toxics Control, March 1991, second printing, EPA/505/2-90-001).

Estimated Chemical Concentration is the estimated chemical concentration that results from the confirmed detection of the substance by the analytical method below the Minimum Level value (see ML).

Inhibition Concentration (IC): a point estimate of the toxicant concentration that would cause a given percent reduction in a non-lethal biological measurement (e.g. reproduction or growth), calculated from a continuous model (e.g. Interpolation Method). IC_{25} is a point estimate of the toxicant concentration that would cause a 25 percent reduction in a non-lethal biological measurement.

Instantaneous Maximum Effluent Limitation: the highest allowable value for any single grab sample or aliquot (i.e., each grab sample or aliquot is independently compared to the instantaneous maximum limitation).

Instantaneous Minimum Effluent Limitation: the lowest allowable value for any single grab sample or aliquot (i.e., each grab sample or aliquot is independently compared to the instantaneous minimum limitation).

LC_{50}, Lethal Concentration, 50 percent: the toxic or effluent concentration that would cause death in 50 percent of the test organisms over a specified period of time.

LOEC, Lowest Observed Effect Concentration: the lowest concentration of an effluent or toxicant that results in adverse effects on the test organism (i.e. where the values for the observed endpoints are statistically different from the control).

Maximum Daily Effluent Limitation (MDEL) means the highest allowable daily discharge of a pollutant, over a calendar day (or 24-hour period). For pollutants with limitations expressed in units of mass, the daily discharge is calculated as the total mass of the pollutant discharged over the day. For pollutants with limitations expressed in other units of measurement, the daily discharge is calculated as the arithmetic mean measurement of the pollutant over the day.

Median is the middle measurement in a set of data. The median of a set of data is found by first arranging the measurements in order of magnitude (either increasing or decreasing order).

If the number of measurements (*n*) is odd, then the median = $X_{(n+1)/2}$. If *n* is even, then the median = $(X_{n/2} + X_{(n/2)+1})/2$ (i.e., the midpoint between the *n*/2 and *n*/2+1).

MDL, Method Detection Limit is the minimum concentration of a substance that can be measured and reported with 99 percent confidence that the analyte concentration is greater than zero, as defined in CFR Part 136 (revised as of July 3, 1999).

ML, Minimum Level is the concentration at which the entire analytical system must give a recognizable signal and acceptable calibration point. The ML is the concentration in a sample that is equivalent to the concentration of the lowest calibration standard analyzed by a specific analytical procedure, assuming that all the method specified sample weights, volumes, and processing steps have been followed.

NOEC, No Observed Effect Concentration: the highest tested concentration of an effluent or test sample whose effect is not different from the control effect, according to the statistical test used (see LOEC). The NOEC is usually the highest tested concentration of an effluent or toxic that causes no observable effects on the test organisms (i.e. the highest concentration of toxicity at which the values for the observed responses do not statistically differ from the controls).

Not Detected (ND) are those sample results less than the laboratory's MDL.

Pollution Prevention means any action that causes a net reduction in the use or generation of a hazardous substance or other pollutant that is discharged into water and includes, but is not limited to, input change, operational improvement, production process change, and product reformulation (as defined in CWC section 13263.3). Pollution prevention does not include actions that merely shift a pollutant in wastewater from one environmental medium to another environmental medium, unless clear environmental benefits of such an approach are identified to the satisfaction of the State or Regional Water Boards.

RL, Reporting Level is the ML (and its associated analytical method) chosen by the Discharger for reporting and compliance determination from the MLs included in this Order. The MLs included in this Order correspond to approved analytical methods for reporting a sample result that are selected by the Regional Water Board either from Appendix 4 of the SIP in accordance with section 2.4.2 of the SIP or established in accordance with section 2.4.3 of the SIP. The ML is based on the proper application of method-based analytical procedures for sample preparation and the absence of any matrix interferences. Other factors may be applied to the ML depending on the specific sample preparation steps employed. For example, the treatment typically applied in cases where there are matrix-effects is to dilute the sample or sample aliquot by a factor of ten. In such cases, this additional factor must be applied to the ML in the computation of the RL.

Source of Drinking Water is any water designated as municipal or domestic supply (MUN) in a Regional Water Board Basin Plan.

Standard Deviation (σ) is a measure of variability that is calculated as follows:

$$\sigma = (\sum[(x - u)^2]/(n - 1))^{0.5}$$

where:

x is the observed value;
u is the arithmetic mean of the observed values; and
n is the number of samples.

Wastewater is defined as either the discharge of: (1) treated municipal wastewater, (2) industrial wastewater, (3) biosolid supernatant, (4) DAF subnatant, (5) stormwater runoff, (6) return agricultural tailwater, (7) biosolids, or (8) any combination of (1) through (7).

Toxicity Reduction Evaluation (TRE) is a study conducted in a step-wise process designed to identify the causative agents of effluent or ambient toxicity, isolate the sources of toxicity, evaluate the effectiveness of toxicity control options, and then confirm the reduction in toxicity. The first steps of the TRE consist of the collection of data relevant to the toxicity, including additional toxicity testing, and an evaluation of facility operations and maintenance practices, and best management practices. A Toxicity Identification Evaluation (TIE) may be required as part of the TRE, if appropriate. (A TIE is a set of procedures to identify the specific chemical(s) responsible for toxicity. These procedures are performed in three phases (characterization, identification, and confirmation) using aquatic organism toxicity tests.

ATTACHMENT B – SITE LOCATION MAP

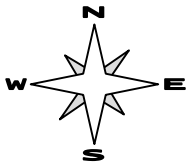

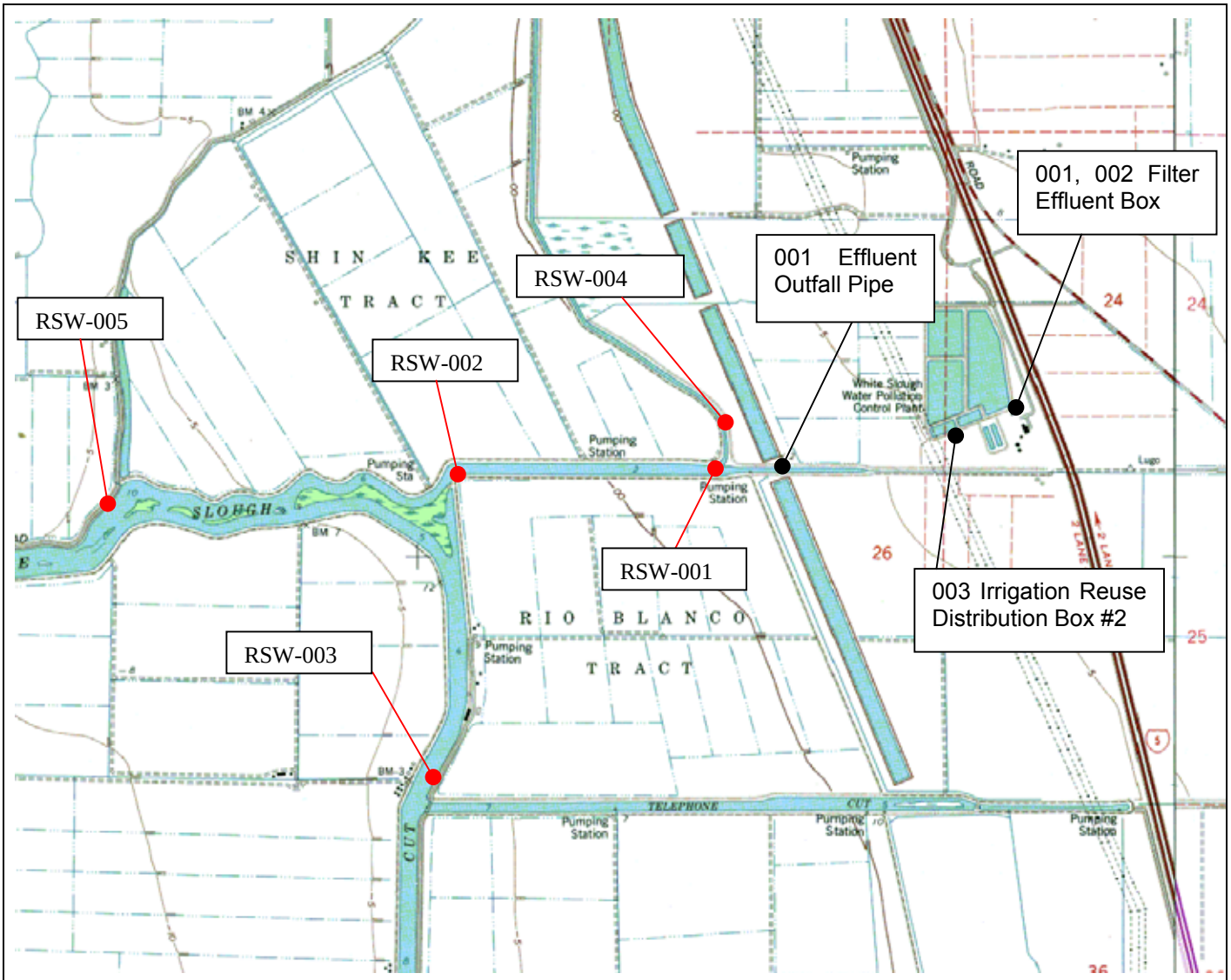

Drawing Reference: U.S.G.S TOPOGRAPHIC MAP 7.5 MINUTE QUADRANGLE *Photorevised 1973* *Not to scale*	**CITY OF LODI** **WHITE SLOUGH WATER POLLUTION CONTROL FACILITY** **SAN JOAQUIN COUNTY**	

ATTACHMENT C-1 – FLOW SCHEMATIC

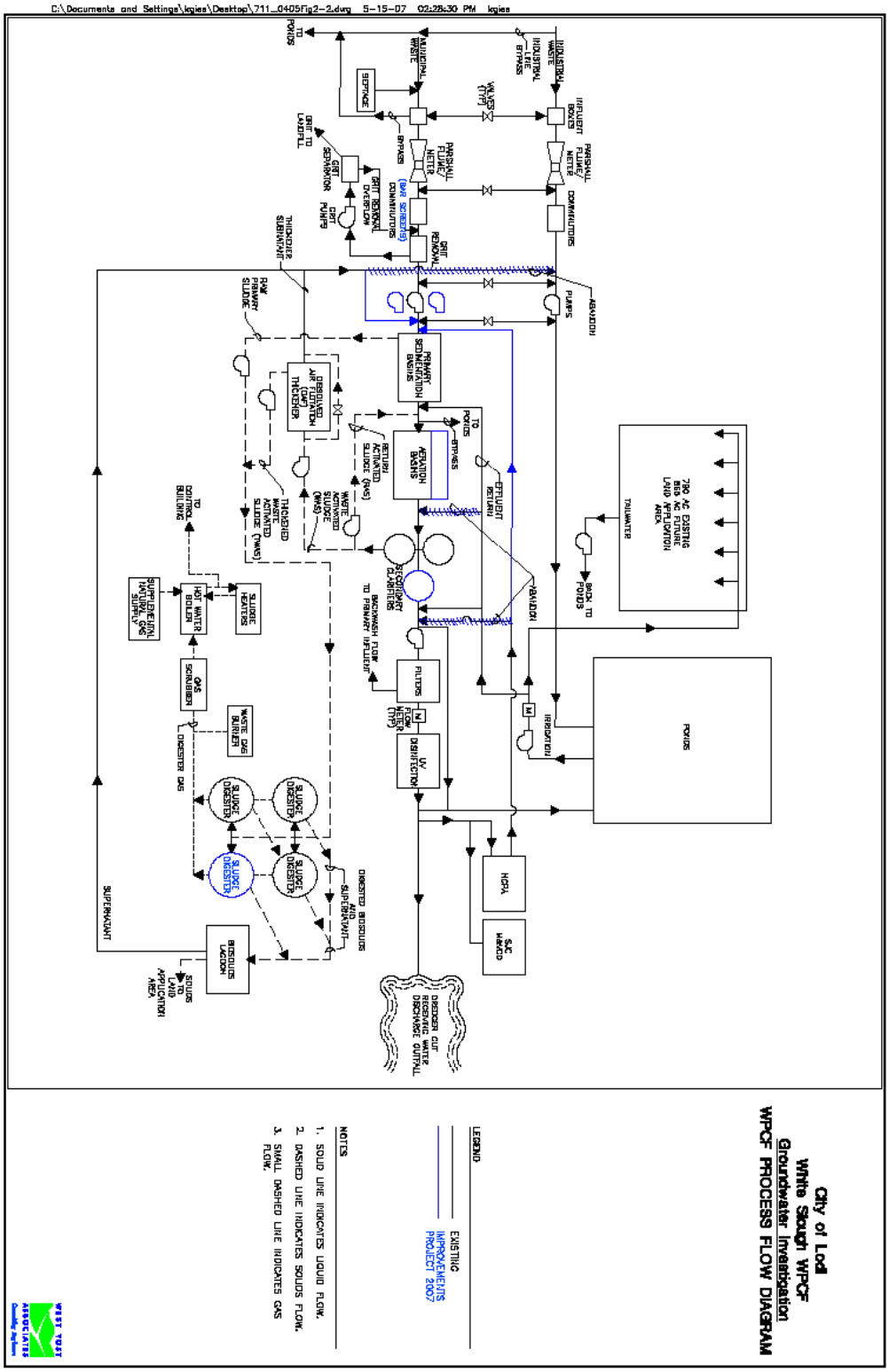

ATTACHMENT C-2 – DISCHARGER'S AGRICULTURAL FIELDS

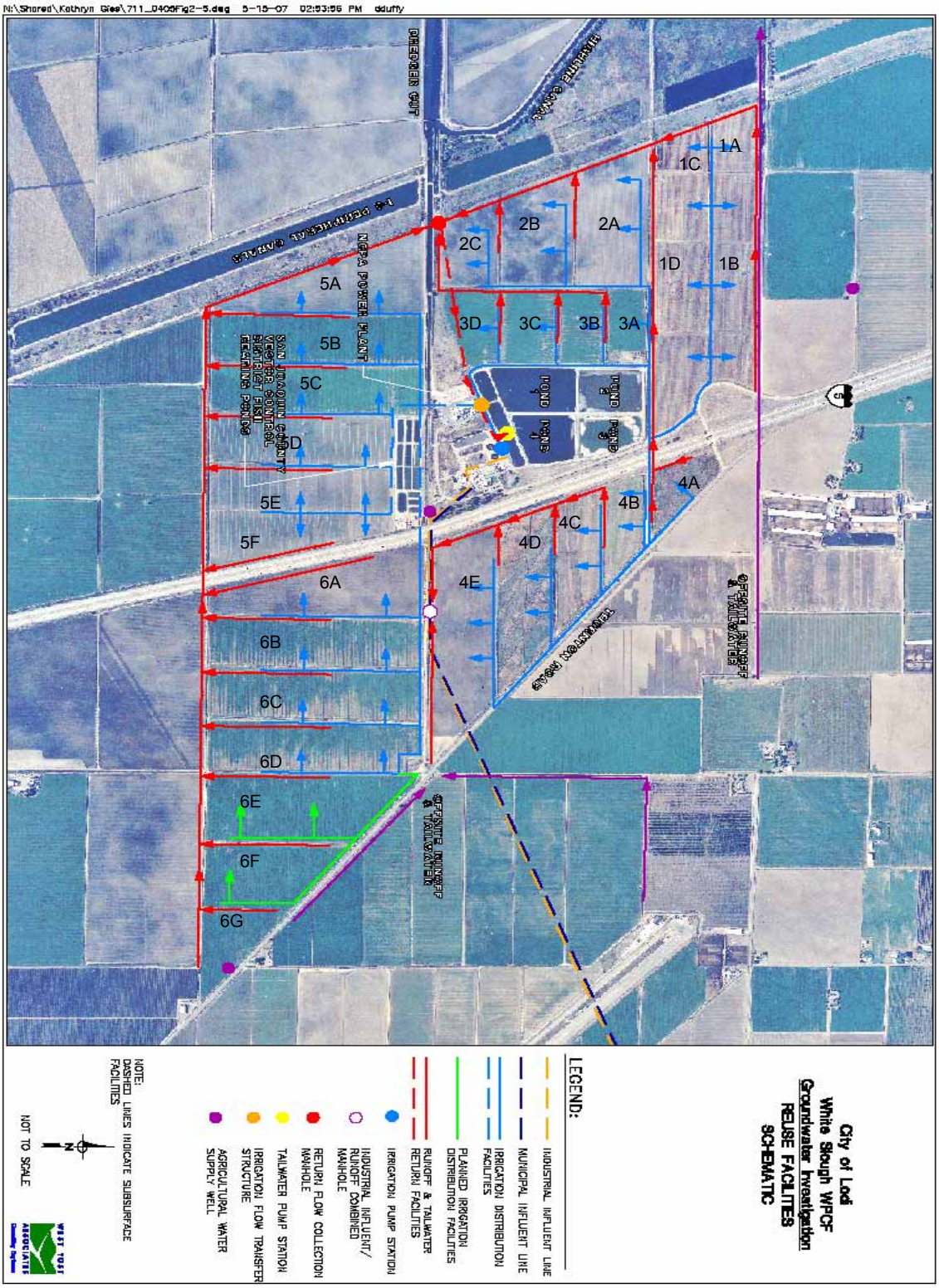

ATTACHMENT D –STANDARD PROVISIONS

I. STANDARD PROVISIONS – PERMIT COMPLIANCE

A. Duty to Comply

1. The Discharger must comply with all of the conditions of this Order. Any noncompliance constitutes a violation of the Clean Water Act (CWA) and the California Water Code and is grounds for enforcement action, for permit termination, revocation and reissuance, or modification; or denial of a permit renewal application. (40 C.F.R. § 122.41(a).)

2. The Discharger shall comply with effluent standards or prohibitions established under Section 307(a) of the CWA for toxic pollutants and with standards for sewage sludge use or disposal established under Section 405(d) of the CWA within the time provided in the regulations that establish these standards or prohibitions, even if this Order has not yet been modified to incorporate the requirement. (40 C.F.R. § 122.41(a)(1).)

B. Need to Halt or Reduce Activity Not a Defense

It shall not be a defense for a Discharger in an enforcement action that it would have been necessary to halt or reduce the permitted activity in order to maintain compliance with the conditions of this Order. (40 C.F.R. § 122.41I.)

C. Duty to Mitigate

The Discharger shall take all reasonable steps to minimize or prevent any discharge or sludge use or disposal in violation of this Order that has a reasonable likelihood of adversely affecting human health or the environment. (40 C.F.R. § 122.41(d).)

D. Proper Operation and Maintenance

The Discharger shall at all times properly operate and maintain all facilities and systems of treatment and control (and related appurtenances) which are installed or used by the Discharger to achieve compliance with the conditions of this Order. Proper operation and maintenance also includes adequate laboratory controls and appropriate quality assurance procedures. This provision requires the operation of backup or auxiliary facilities or similar systems that are installed by a Discharger only when necessary to achieve compliance with the conditions of this Order. (40 C.F.R. § 122.41(e).)

E. Property Rights

1. This Order does not convey any property rights of any sort or any exclusive privileges. (40 C.F.R. § 122.41(g).)

2. The issuance of this Order does not authorize any injury to persons or property or invasion of other private rights, or any infringement of state or local law or regulations. (40 C.F.R. § 122.5I.)

F. Inspection and Entry

The Discharger shall allow the Regional Water Board, State Water Board, United States Environmental Protection Agency (USEPA), and/or their authorized representatives (including an authorized contractor acting as their representative), upon the presentation of credentials and other documents, as may be required by law, to (40 C.F.R. § 122.41(i); Water Code, § 13383):

1. Enter upon the Discharger's premises where a regulated facility or activity is located or conducted, or where records are kept under the conditions of this Order (40 C.F.R. § 122.41(i)(1));

2. Have access to and copy, at reasonable times, any records that must be kept under the conditions of this Order (40 C.F.R. § 122.41(i)(2));

3. Inspect and photograph, at reasonable times, any facilities, equipment (including monitoring and control equipment), practices, or operations regulated or required under this Order (40 C.F.R. § 122.41(i)(3)); and

4. Sample or monitor, at reasonable times, for the purposes of assuring Order compliance or as otherwise authorized by the CWA or the Water Code, any substances or parameters at any location. (40 C.F.R. § 122.41(i)(4).)

G. Bypass

1. Definitions

   a. "Bypass" means the intentional diversion of waste streams from any portion of a treatment facility. (40 C.F.R. § 122.41(m)(1)(i).)

   b. "Severe property damage" means substantial physical damage to property, damage to the treatment facilities, which causes them to become inoperable, or substantial and permanent loss of natural resources that can reasonably be expected to occur in the absence of a bypass. Severe property damage does not mean economic loss caused by delays in production. (40 C.F.R. § 122.41(m)(1)(ii).)

2. Bypass not exceeding limitations. The Discharger may allow any bypass to occur which does not cause exceedances of effluent limitations, but only if it is for essential maintenance to assure efficient operation. These bypasses are not subject to the provisions listed in Standard Provisions – Permit Compliance I.G.3, I.G.4, and I.G.5 below. (40 C.F.R. § 122.41(m)(2).)

3. Prohibition of bypass. Bypass is prohibited, and the Regional Water Board may take enforcement action against a Discharger for bypass, unless (40 C.F.R. § 122.41(m)(4)(i)):

    a. Bypass was unavoidable to prevent loss of life, personal injury, or severe property damage (40 C.F.R. § 122.41(m)(4)(i)(A));

    b. There were no feasible alternatives to the bypass, such as the use of auxiliary treatment facilities, retention of untreated wastes, or maintenance during normal periods of equipment downtime. This condition is not satisfied if adequate back-up equipment should have been installed in the exercise of reasonable engineering judgment to prevent a bypass that occurred during normal periods of equipment downtime or preventive maintenance (40 C.F.R. § 122.41(m)(4)(i)(B)); and

    c. The Discharger submitted notice to the Regional Water Board as required under Standard Provisions – Permit Compliance I.G.5 below. (40 C.F.R. § 122.41(m)(4)(i)I.)

4. The Regional Water Board may approve an anticipated bypass, after considering its adverse effects, if the Regional Water Board determines that it will meet the three conditions listed in Standard Provisions – Permit Compliance I.G.3 above. (40 C.F.R. § 122.41(m)(4)(ii).)

5. Notice

    i. Anticipated bypass. If the Discharger knows in advance of the need for a bypass, it shall submit a notice, if possible at least 10 days before the date of the bypass. (40 C.F.R. § 122.41(m)(3)(i).)

    ii. Unanticipated bypass. The Discharger shall submit notice of an unanticipated bypass as required in Standard Provisions – Reporting V.E below (24-hour notice). (40 C.F.R. § 122.41(m)(3)(ii).)

H. Upset

Upset means an exceptional incident in which there is unintentional and temporary noncompliance with technology based permit effluent limitations because of factors beyond the reasonable control of the Discharger. An upset does not include noncompliance to the extent caused by operational error, improperly designed treatment facilities, inadequate treatment facilities, lack of preventive maintenance, or careless or improper operation. (40 C.F.R. § 122.41(n)(1).)

1. Effect of an upset. An upset constitutes an affirmative defense to an action brought for noncompliance with such technology based permit effluent limitations if the requirements of Standard Provisions – Permit Compliance I.H.2 below are met. No determination made during administrative review of claims that noncompliance was caused by upset, and before an action for noncompliance, is final administrative action subject to judicial review. (40 C.F.R. § 122.41(n)(2).).

2. Conditions necessary for a demonstration of upset. A Discharger who wishes to establish the affirmative defense of upset shall demonstrate, through properly signed, contemporaneous operating logs or other relevant evidence that (40 C.F.R. § 122.41(n)(3)):

   a. An upset occurred and that the Discharger can identify the cause(s) of the upset (40 C.F.R. § 122.41(n)(3)(i));

   b. The permitted facility was, at the time, being properly operated (40 C.F.R. § 122.41(n)(3)(ii));

   iii. The Discharger submitted notice of the upset as required in Standard Provisions – Reporting V.E.2.b below (24-hour notice) (40 C.F.R. § 122.41(n)(3)(iii)); and

   iv. The Discharger complied with any remedial measures required under Standard Provisions – Permit Compliance I.C above. (40 C.F.R. § 122.41(n)(3)(iv).)

3. Burden of proof. In any enforcement proceeding, the Discharger seeking to establish the occurrence of an upset has the burden of proof. (40 C.F.R. § 122.41(n)(4).)

II. STANDARD PROVISIONS – PERMIT ACTION

A. General

This Order may be modified, revoked and reissued, or terminated for cause. The filing of a request by the Discharger for modification, revocation and reissuance, or termination, or a notification of planned changes or anticipated noncompliance does not stay any Order condition. (40 C.F.R. § 122.41(f).)

B. Duty to Reapply

If the Discharger wishes to continue an activity regulated by this Order after the expiration date of this Order, the Discharger must apply for and obtain a new permit. (40 C.F.R. § 122.41(b).)

C. Transfers

This Order is not transferable to any person except after notice to the Regional Water Board. The Regional Water Board may require modification or revocation and reissuance of the Order to change the name of the Discharger and incorporate such other requirements as may be necessary under the CWA and the Water Code. (40 C.F.R. § 122.41(l)(3); § 122.61.)

III. STANDARD PROVISIONS – MONITORING

A. Samples and measurements taken for the purpose of monitoring shall be representative of the monitored activity. (40 C.F.R. § 122.41(j)(1).)

B. Monitoring results must be conducted according to test procedures under Part 136 or, in the case of sludge use or disposal, approved under Part 136 unless otherwise specified in Part 503 unless other test procedures have been specified in this Order. (40 C.F.R. § 122.41(j)(4); § 122.44(i)(1)(iv).)

IV. STANDARD PROVISIONS – RECORDS

A. Except for records of monitoring information required by this Order related to the Discharger's sewage sludge use and disposal activities, which shall be retained for a period of at least five years (or longer as required by Part 503), the Discharger shall retain records of all monitoring information, including all calibration and maintenance records and all original strip chart recordings for continuous monitoring instrumentation, copies of all reports required by this Order, and records of all data used to complete the application for this Order, for a period of at least three (3) years from the date of the sample, measurement, report or application. This period may be extended by request of the Regional Water Board Executive Officer at any time. (40 C.F.R. § 122.41(j)(2).)

B. Records of monitoring information shall include:

1. The date, exact place, and time of sampling or measurements (40 C.F.R. § 122.41(j)(3)(i));

2. The individual(s) who performed the sampling or measurements (40 C.F.R. § 122.41(j)(3)(ii));

3. The date(s) analyses were performed (40 C.F.R. § 122.41(j)(3)(iii));

4. The individual(s) who performed the analyses (40 C.F.R. § 122.41(j)(3)(iv));

5. The analytical techniques or methods used (40 C.F.R. § 122.41(j)(3)(v)); and

6. The results of such analyses. (40 C.F.R. § 122.41(j)(3)(vi).)

C. Claims of confidentiality for the following information will be denied (40 C.F.R. § 122.7(b)):

1. The name and address of any permit applicant or Discharger (40 C.F.R. § 122.7(b)(1)); and

2. Permit applications and attachments, permits and effluent data. (40 C.F.R. § 122.7(b)(2).)

V. STANDARD PROVISIONS – REPORTING

A. Duty to Provide Information

The Discharger shall furnish to the Regional Water Board, State Water Board, or USEPA within a reasonable time, any information which the Regional Water Board, State Water Board, or USEPA may request to determine whether cause exists for modifying, revoking and reissuing, or terminating this Order or to determine compliance with this Order. Upon request, the Discharger shall also furnish to the Regional Water Board, State Water Board, or USEPA copies of records required to be kept by this Order. (40 C.F.R. § 122.41(h); Water Code, § 13267.)

B. Signatory and Certification Requirements

1. All applications, reports, or information submitted to the Regional Water Board, State Water Board, and/or USEPA shall be signed and certified in accordance with Standard Provisions – Reporting V.B.2, V.B.3, V.B.4, and V.B.5 below. (40 C.F.R. § 122.41(k).)

2. All permit applications shall be signed as follows:

   All permit applications shall be signed by either a principal executive officer or ranking elected official. For purposes of this provision, a principal executive officer of a federal agency includes: (i) the chief executive officer of the agency, or (ii) a senior executive officer having responsibility for the overall operations of a principal geographic unit of the agency (e.g., Regional Administrators of USEPA). (40 C.F.R. § 122.22(a)(3).).

3. All reports required by this Order and other information requested by the Regional Water Board, State Water Board, or USEPA shall be signed by a person described in Standard Provisions – Reporting V.B.2 above, or by a duly authorized representative of that person. A person is a duly authorized representative only if:

   a. The authorization is made in writing by a person described in Standard Provisions – Reporting V.B.2 above (40 C.F.R. § 122.22(b)(1));

   b. The authorization specifies either an individual or a position having responsibility for the overall operation of the regulated facility or activity such as the position of plant manager, operator of a well or a well field, superintendent, position of equivalent responsibility, or an individual or position having overall responsibility for environmental matters for the company. (A duly authorized representative may thus be either a named individual or any individual occupying a named position.) (40 C.F.R. § 122.22(b)(2)); and

   c. The written authorization is submitted to the Regional Water Board and State Water Board. (40 C.F.R. § 122.22(b)(3).)

4. If an authorization under Standard Provisions – Reporting V.B.3 above is no longer accurate because a different individual or position has responsibility for the overall

operation of the facility, a new authorization satisfying the requirements of Standard Provisions – Reporting V.B.3 above must be submitted to the Regional Water Board and State Water Board prior to or together with any reports, information, or applications, to be signed by an authorized representative. (40 C.F.R. § 122.22l.)

5. Any person signing a document under Standard Provisions – Reporting V.B.2 or V.B.3 above shall make the following certification:

   "I certify under penalty of law that this document and all attachments were prepared under my direction or supervision in accordance with a system designed to assure that qualified personnel properly gather and evaluate the information submitted. Based on my inquiry of the person or persons who manage the system or those persons directly responsible for gathering the information, the information submitted is, to the best of my knowledge and belief, true, accurate, and complete. I am aware that there are significant penalties for submitting false information, including the possibility of fine and imprisonment for knowing violations." (40 C.F.R. § 122.22(d).)

C. Monitoring Reports

1. Monitoring results shall be reported at the intervals specified in the Monitoring and Reporting Program (Attachment E) in this Order. (40 C.F.R. § 122.22(l)(4).)

2. Monitoring results must be reported on a Discharge Monitoring Report (DMR) form or forms provided or specified by the Regional Water Board or State Water Board for reporting results of monitoring of sludge use or disposal practices. (40 C.F.R. § 122.41(l)(4)(i).)

3. If the Discharger monitors any pollutant more frequently than required by this Order using test procedures approved under Part 136 or, in the case of sludge use or disposal, approved under Part 136 unless otherwise specified in Part 503, or as specified in this Order, the results of this monitoring shall be included in the calculation and reporting of the data submitted in the DMR or sludge reporting form specified by the Regional Water Board. (40 C.F.R. § 122.41(l)(4)(ii).)

4. Calculations for all limitations, which require averaging of measurements, shall utilize an arithmetic mean unless otherwise specified in this Order. (40 C.F.R. § 122.41(l)(4)(iii).)

D. Compliance Schedules

Reports of compliance or noncompliance with, or any progress reports on, interim and final requirements contained in any compliance schedule of this Order, shall be submitted no later than 14 days following each schedule date. (40 C.F.R. § 122.41(l)(5).)

E. Twenty-Four Hour Reporting

1. The Discharger shall report any noncompliance that may endanger health or the environment. Any information shall be provided orally within 24 hours from the time

the Discharger becomes aware of the circumstances. A written submission shall also be provided within five (5) days of the time the Discharger becomes aware of the circumstances. The written submission shall contain a description of the noncompliance and its cause; the period of noncompliance, including exact dates and times, and if the noncompliance has not been corrected, the anticipated time it is expected to continue; and steps taken or planned to reduce, eliminate, and prevent reoccurrence of the noncompliance. (40 C.F.R. § 122.41(l)(6)(i).)

2. The following shall be included as information that must be reported within 24 hours under this paragraph (40 C.F.R. § 122.41(l)(6)(ii)):

   a. Any unanticipated bypass that exceeds any effluent limitation in this Order. (40 C.F.R. § 122.41(l)(6)(ii)(A).)

   b. Any upset that exceeds any effluent limitation in this Order. (40 C.F.R. § 122.41(l)(6)(ii)(B).)

3. The Regional Water Board may waive the above-required written report under this provision on a case-by-case basis if an oral report has been received within 24 hours. (40 C.F.R. § 122.41(l)(6)(iii).)

F. Planned Changes

The Discharger shall give notice to the Regional Water Board as soon as possible of any planned physical alterations or additions to the permitted facility. Notice is required under this provision only when (40 C.F.R. § 122.41(l)(1)):

1. The alteration or addition to a permitted facility may meet one of the criteria for determining whether a facility is a new source in section 122.29(b) (40 C.F.R. § 122.41(l)(1)(i)); or

2. The alteration or addition could significantly change the nature or increase the quantity of pollutants discharged. This notification applies to pollutants that are not subject to effluent limitations in this Order. (40 C.F.R. § 122.41(l)(1)(ii).)

3. The alteration or addition results in a significant change in the Discharger's sludge use or disposal practices, and such alteration, addition, or change may justify the application of permit conditions that are different from or absent in the existing permit, including notification of additional use or disposal sites not reported during the permit application process or not reported pursuant to an approved land application plan. (40 C.F.R.§ 122.41(l)(1)(iii).)

G. Anticipated Noncompliance

The Discharger shall give advance notice to the Regional Water Board or State Water Board of any planned changes in the permitted facility or activity that may result in noncompliance with General Order requirements. (40 C.F.R. § 122.41(l)(2).)

H. Other Noncompliance

The Discharger shall report all instances of noncompliance not reported under Standard Provisions – Reporting V.C, V.D, and V.E above at the time monitoring reports are submitted. The reports shall contain the information listed in Standard Provision – Reporting V.E above. (40 C.F.R. § 122.41(l)(7).)

I. Other Information

When the Discharger becomes aware that it failed to submit any relevant facts in a permit application, or submitted incorrect information in a permit application or in any report to the Regional Water Board, State Water Board, or USEPA, the Discharger shall promptly submit such facts or information. (40 C.F.R. § 122.41(l)(8).)

VI. STANDARD PROVISIONS – ENFORCEMENT

The Regional Water Board is authorized to enforce the terms of this permit under several provisions of the Water Code, including, but not limited to, sections 13385, 13386, and 13387.

VII. ADDITIONAL PROVISIONS – NOTIFICATION LEVELS

A. Publicly-Owned Treatment Works (POTWs)

All POTWs shall provide adequate notice to the Regional Water Board of the following (40 C.F.R. § 122.42(b)):

1. Any new introduction of pollutants into the POTW from an indirect discharger that would be subject to sections 301 or 306 of the CWA if it were directly discharging those pollutants (40 C.F.R. § 122.42(b)(1)); and

2. Any substantial change in the volume or character of pollutants being introduced into that POTW by a source introducing pollutants into the POTW at the time of adoption of the Order. (40 C.F.R. § 122.42(b)(2).)

3. Adequate notice shall include information on the quality and quantity of effluent introduced into the POTW as well as any anticipated impact of the change on the quantity or quality of effluent to be discharged from the POTW. (40 C.F.R. § 122.42(b)(3).)

ATTACHMENT E – MONITORING AND REPORTING PROGRAM

Table of Contents

Attachment E – Monitoring and Reporting Program (MRP) E-1
I. General Monitoring Provisions E-1
II. Monitoring Locations E-1
III. Influent Monitoring Requirements E-2
A. Municipal Influent - Monitoring Location INF-001 ..... E-2
B. Industrial Influent - Monitoring Location INF-002 ..... E-3
IV. Effluent Monitoring Requirements E-3
A. Effluent Discharged to Dredger Cut - Monitoring Location EFF-001 ..... E-3
V. Whole Effluent Toxicity Testing Requirements E-5
VI. Land Discharge Monitoring Requirements E-7
A. Monitoring Location LND-001, Reclaimed Wastewater E-7
B. The Agricultural Field Inspections E-8
C. Monitoring Location EFF-001, Municipal Discharges to Storage Ponds E-9
VII. Reclamation Monitoring Requirements E-9
A. Monitoring Location EFF-001 ..... E-9
B. Wastewater in Storage Ponds, Monitoring Locations PND-001 thru PND-004 ..... E-9
VIII. Receiving Water Monitoring Requirements – Surface Water and Groundwater E-10
A. Surface Water Monitoring Locations RSW-1 through RSW-5 ..... E-11
B. Ground Water Monitoring Locations E-12
IX. Other Monitoring Requirements E-13
A. Municipal Water Supply E-13
X. Reporting Requirements E-13
A. General Monitoring and Reporting Requirements E-13
B. Self Monitoring Reports (SMRs) E-14
C. Discharge Monitoring Reports (DMRs) E-17
D. Other Reports E-18

List of Tables

Table E-1. Monitoring Station Locations E-2
Table E-2. Influent Monitoring, Municipal E-3
Table E-3. Influent Monitoring, Industrial E-3
Table E-4. Effluent Monitoring E-4
Table E-5. Chronic Toxicity Testing Dilution Series E-6
Table E-6 Land Discharge to The Agricultural Fields Monitoring Requirements E-7
Table E-7a. Reclamation Monitoring Requirements E-9
Table E-7b. Pond(s) Monitoring Requirements E-9
Table E-8a. Receiving Water Monitoring Requirements, Surface Water E-11
Table E-8b. Receiving Water Monitoring Requirements, Groundwater E-12
Table E-9. Municipal Water Supply Monitoring Requirements E-13
Table E-10. Monitoring Periods and Reporting Schedule E-17
Table E-11. Reporting Requirements for Special Provisions Progress Reports E-18

ATTACHMENT E – MONITORING AND REPORTING PROGRAM (MRP)

The Code of Federal Regulations section 122.48 requires that all NPDES permits specify monitoring and reporting requirements. Water Code Sections 13267 and 13383 also authorize the Regional Water Quality Control Board (Regional Water Board) to require technical and monitoring reports. This MRP establishes monitoring and reporting requirements, which implement the federal and State regulations.

I. GENERAL MONITORING PROVISIONS

A. Samples and measurements taken as required herein shall be representative of the volume and nature of the monitored discharge. All samples shall be taken at the monitoring locations specified below and, unless otherwise specified, before the monitored flow joins or is diluted by any other waste stream, body of water, or substance. Monitoring locations shall not be changed without notification to and the approval of this Regional Water Board.

B. Chemical, bacteriological, and bioassay analyses shall be conducted at a laboratory certified for such analyses by the State Department of Health Services (DHS). In the event a certified laboratory is not available to the Discharger, analyses performed by a noncertified laboratory will be accepted provided a Quality Assurance-Quality Control Program is instituted by the laboratory. A manual containing the steps followed in this program must be kept in the laboratory and shall be available for inspection by Regional Water Board staff. The Quality Assurance-Quality Control Program must conform to USEPA guidelines or to procedures approved by the Regional Water Board.

C. All analyses shall be performed in a laboratory certified to perform such analyses by the DHS. Laboratories that perform sample analyses shall be identified in all monitoring reports.

D. Appropriate flow measurement devices and methods consistent with accepted scientific practices shall be selected and used to ensure the accuracy and reliability of measurements of the volume of monitored discharges. All monitoring instruments and devices used by the Discharger to fulfill the prescribed monitoring program shall be properly maintained and calibrated as necessary to ensure their continued accuracy. All flow measurement devices shall be calibrated at least once per year to ensure continued accuracy of the devices.

E. Monitoring results, including noncompliance, shall be reported at intervals and in a manner specified in this MRP.

II. MONITORING LOCATIONS

The Discharger shall establish the following monitoring locations to demonstrate compliance with the effluent limitations, discharge specifications, and other requirements in this Order:

Table E-1. Monitoring Station Locations

Discharge Point Name[1]	Monitoring Location Name	Monitoring Location Description
--	**INF-001**	Municipal Influent to Facility
--	**INF-002**	Industrial Influent to Facility
001	**EFF-001**	At the filter pump station effluent box (38º 05' 22.9" N, 121º 23' 07.1" W), at which all waste tributary to the discharge outfall is present, is representative of the discharge, and at which point adequate disinfection is assured for the discharge of tertiary treated municipal effluent to Dredger Cut.
002	**EFF-001**	At the filter pump station effluent box (38º 05' 22.9" N, 121º 23' 07.1" W), at which all waste tributary to the recycled water supply line is present, and is representative of the disinfected tertiary recycled water supplied to the Discharger's clients.
--	**PND-001 - 004**	At a point in each pond, at which all waste tributary to the pond is present, and is representative of the combined wastewaters discharged into the facility pond(s).
003	**LND-001**	At reclaimed water distribution box #2 (38º 05' 19.8" N, 121º 23' 16.3" W), at which all waste tributary to the irrigation line is present, and is representative of the irrigation reuse waters applied to The Agricultural Fields.
--	**RSW-001**	At the east side of the middle of the bridge crossing over Dredger Cut (38º, 05', 13.4" N, 121º, 24', 04.6" W), approximately 1000 feet west of the effluent discharge end of pipe. Note "end of pipe" is at the east end of Dredger Cut (38º 05' 14.1" N, 121º 23' 52.2" W)
--	**RSW-002**	Dredger Cut at White Slough, at the northwest corner of Rio Blanco Tract. (38º 05' 12.30" N, 121º 24' 56.28" W)
--	**RSW-003**	At the eastside of Bishop Cut at Telephone Cut, 300 feet north of the north-end of the Telephone Cut bridge. (38º, 04', 24.8" N, 121º, 25', 00.2" W)
--	**RSW-004**	At the eastside of Highline Canal, approximately 440 feet northeast of RSW-001. (38º, 05', 17.4" N, 121º, 24', 02.4" W)
--	**RSW-005**	North Channel White Slough at Upland Canal, approximately 5330 feet west of RSW-002. (38º, 05', 12.30" N, 121º, 26', 01.65" W)
--	**RGW-XX**	Monitoring wells WSM-1 through WSM-9, WSM-12, WSM-14 through WSM-16, and any other well subsequently installed for the study required in Provision VI.C.2.d. of this Order
--	**SPL-001**	Municipal Water Supply

1 See Table 2, Discharge Location, in the Limitations and Discharge Requirements section of this Order for the discharge points location descriptions

.

III. INFLUENT MONITORING REQUIREMENTS

A. Municipal Influent - Monitoring Location INF-001

1. The Discharger shall monitor the municipal influent to the facility at INF-001 as follows. Influent samples shall be collected at approximately the same time as effluent samples and shall be representative of the influent:

Table E-2. Municipal Influent Monitoring – INF-001

Parameter	Units	Sample Type	Minimum Sampling Frequency	Required Analytical Test Method
BOD 5-day 20°C	mg/L	24-hr Composite[1]	1/week	
Total Suspended Solids	mg/L	24-hr Composite[1,]	1/week	
Flow	mgd	Meter	Continuous	
Electrical Conductivity @ 25°C	umhos/cm	Grab	1/week	
Total Dissolved Solids	mg/L	Grab	1/week	

1. 24-hour flow proportioned composite. Currently the Discharger does not have the capability of collecting 24-hour flow-proportioned composite samples, and thus time-weighted composite samples may be used until 1 April 2008.

B. Industrial Influent - Monitoring Location INF-002

1. The Discharger shall monitor the industrial influent to the facility at INF-002 according to the characterization study approved by the Executive Officer, which is required in Provision VI.C.2.c of this Order, and as follows.

Table E-3. Industrial Influent Monitoring – INF-002

Parameter	Units	Sample Type	Minimum Sampling Frequency	Required Analytical Test Method
Flow	mgd	Meter	Continuous	
Electrical Conductivity @ 25°C	umhos/cm	Grab	1/week	
Total Dissolved Solids	mg/L	Grab	1/week	
Heavy Metals[1]	ug/L	Grab	Annually[2]	Method 1631

1. Heavy metals shall include analyses for Arsenic, Cadmium, Chromium, Copper, Iron, Lead, Mercury, Molybdenum, Nickel, Selenium, and Zinc. Mercury analysis requires use of "clean technique."
2. Samples shall be collected during the month of February.

IV. EFFLUENT MONITORING REQUIREMENTS

A. Effluent Discharged to Dredger Cut - Monitoring Location EFF-001

1. The Discharger shall monitor treated municipal effluent at EFF-001 as follows. If more than one analytical test method is listed for a given parameter, the Discharger must select from the methods and corresponding Minimum Level listed below. Sampling is not required during periods when no municipal effluent is directed to Dredger Cut.

Table E-4. Effluent Monitoring – EFF-001

Parameter	Units	Sample Type	Minimum Sampling Frequency	Required Analytical Test Method and (Minimum Level, units), respectively
Flow	mgd	Meter	Continuous	
Temperature	°F	Meter	Continuous	
Total Residual Chlorine [1]	mg/L	Grab	Daily/event	
pH	Standard Units	Grab	1/day	
BOD 5-day 20°C	mg/L	24-hr Composite[6]	1/day	
Total Suspended Solids	mg/L	24-hr Composite[6]	1/day	
Total Coliform Organisms	MPN/100 mL	Grab	1/day	
Turbidity	NTU	Meter	Continuous	
Dissolved Oxygen	mg/L	Grab	1/day	
Ammonia (as N) [2, 3]	mg/L	Grab	1/week	
Nitrate (as N)	mg/L	Grab	1/week	
Nitrite (as N)	mg/L	Grab	1/week	
Total Kjeldahl Nitrogen (as N)	mg/L	Grab	1/month	
Total Organic Carbon	mg/L	Grab	1/month	
Electrical Conductivity @ 25°C	umhos/cm	Grab	1/week	
Total Dissolved Solids	mg/L	Grab	1/month	
Aluminum, Total[4]	ug/L	24-hr Composite[6]	1/month	
Manganese[4]	ug/L	24-hr Composite[6]	1/month	
Mercury, total	ng/L	Grab	1/month	Method 1631[7]
Methlymercury	ng/L	Grab	1/month	Method 1630[7]
Dichlorobromomethane[4]	ug/L	Grab	1/month	
Chlorodibromomethane[4]	ug/L	Grab	1/month	
Molybdenum	ug/L	24-hr Composite[6]	1/year	
Standard Minerals[5]	mg/L	Grab	1/year	

1. Total residual chlorine must be monitored with a method sensitive to and accurate at a detection level of 0.01 mg/L. Monitoring shall be conducted when chlorine is used at the facility (e.g. in maintenance activities, to deactivate foaming agents, etc.), which defines an event.
2. Concurrent with biotoxicity monitoring
3. Report as total.
4. Detection limits shall be below the effluent limitations. If the lowest minimum level (ML) published in Appendix 4 of the Policy for Implementation of Toxics Standards for Inland Surface Waters, Enclosed Bays, and Estuaries of California (State Implementation Plan or SIP) is not below the effluent limitation, the detection limit shall be the lowest ML.
5. Standard minerals shall include the following: boron, calcium, iron, magnesium, potassium, sodium, chloride, phosphorus, total alkalinity (including alkalinity series), and hardness, and include verification that the analysis is complete (i.e., cation/anion balance).
6. 24-hour flow proportioned composite.
7. Unfiltered total mercury and methlymercury samples shall be taken using clean hands/dirty hands procedures, as described in USEPA Method 1669: *Sampling Ambient Water for Trace Metals at EPA Water Quality Criteria Levels,* for collection of equipment blanks (section 9.4.4.2), and shall be analyzed by USEPA Method 1631/1630 (Revision E) with a method detection limit of 0.2 ng/L for total mercury and 0.02 ng/L for methylmercury.

V. WHOLE EFFLUENT TOXICITY TESTING REQUIREMENTS

A. **Acute Toxicity Testing.** The Discharger shall conduct acute toxicity testing to determine whether the effluent is contributing acute toxicity to the receiving water. The Discharger shall meet the following acute toxicity testing requirements:

1. *Monitoring Frequency* – the Discharger shall perform weekly acute toxicity testing, concurrent with effluent ammonia sampling. Sampling is not required during periods when not discharging to Dredger Cut.
2. *Sample Types* – For static non-renewal and static renewal testing, the samples shall be flow proportional 24-hour composites and shall be representative of the volume and quality of the discharge. The effluent samples shall be taken at the effluent monitoring location EFF-001.
3. *Test Species* – Test species shall be fathead minnows (*Pimephales promelas*).
4. *Methods* – The acute toxicity testing samples shall be analyzed using EPA-821-R-02-012, Fifth Edition. Temperature, total residual chlorine, and pH shall be recorded at the time of sample collection. No pH adjustment may be made unless approved by the Executive Officer.
5. *Test Failure* – If an acute toxicity test does not meet all test acceptability criteria, as specified in the test method, the Discharger must re-sample and re-test as soon as possible, not to exceed 7 days following notification of test failure.

B. **Chronic Toxicity Testing**. The Discharger shall conduct three species chronic toxicity testing to determine whether the effluent is contributing chronic toxicity to the receiving water. The Discharger shall meet the following chronic toxicity testing requirements:

1. *Monitoring Frequency* – the Discharger shall perform quarterly, three species chronic toxicity testing. Sampling is not required during periods when not discharging to Dredger Cut.
2. *Sample Types* – Effluent samples shall be flow proportional 24-hour composites and shall be representative of the volume and quality of the discharge. The effluent samples shall be taken at the effluent monitoring location EFF-001. The receiving water control shall be a grab sample obtained from Bishop Cut at RSW-003.
3. *Sample Volumes* – Adequate sample volumes shall be collected to provide renewal water to complete the test in the event that the discharge is intermittent.
4. *Test Species* – Chronic toxicity testing measures sublethal (e.g. reduced growth, reproduction) and/or lethal effects to test organisms exposed to an effluent compared to that of the control organisms. The Discharger shall conduct chronic toxicity tests with:
   - The cladoceran, water flea, *Ceriodaphnia dubia* (survival and reproduction test);
   - The fathead minnow, *Pimephales promelas* (larval survival and growth test); and
   - The green alga, *Selenastrum capricornutum* (growth test).

5. *Methods* – The presence of chronic toxicity shall be estimated as specified in *Short-term Methods for Estimating the Chronic Toxicity of Effluents and Receiving Waters to Freshwater Organisms, Fourth Edition,* EPA/821-R-02-013, October 2002.
6. *Reference Toxicant* – As required by the SIP, all chronic toxicity tests shall be conducted with concurrent testing with a reference toxicant and shall be reported with the chronic toxicity test results.
7. *Dilutions* – The chronic toxicity testing shall be performed using the dilution series identified in Table E-5, below. The receiving water control from Dredger Cut (or Bishop Cut) taken out of the influence of the discharge shall be used as the diluent (unless the receiving water is toxic). If the receiving water is toxic, laboratory control water may be used as the diluent, in which case, the receiving water must still be sampled and tested to provide evidence of its toxicity.
8. *Test Failure* –The Discharger must re-sample and re-test as soon as possible, but no later than fourteen (14) days after receiving notification of a test failure. A test failure is defined as follows:
   a. The reference toxicant test or the effluent test does not meet all test acceptability criteria as specified in the *Short-term Methods for Estimating the Chronic Toxicity of Effluents and Receiving Waters to Freshwater Organisms, Fourth Edition*, EPA/821-R-02-013, October 2002 (Method Manual), and its subsequent amendments or revisions; or
   b. The percent minimum significant difference (PMSD) measured for the test exceeds the upper PMSD bound variability criterion in Table 6 on page 52 of the Method Manual. (A retest is only required in this case if the test results do not exceed the monitoring trigger specified in Special Provisions VI.C.2.a.iii.)

Table E-5. Chronic Toxicity Testing Dilution Series

Sample	Dilutions (%)					Controls	
	100	75	50	25	12.5	Receiving Water	Laboratory Water
% Effluent	100	75	50	25	12.5	0	0
% Receiving Water	0	25	50	75	87.5	100	0
% Laboratory Water	0	0	0	0	0	0	100

C. **WET Testing Notification Requirements**. The Discharger shall notify the Regional Water Board within 24-hrs after the receipt of test results exceeding the numeric chronic toxicity monitoring trigger during regular or accelerated monitoring, or an exceedance of the acute toxicity effluent limitation.

D. **WET Testing Reporting Requirements**. All toxicity test reports shall include the contracting laboratory's complete report provided to the Discharger and shall be in accordance with the appropriate "Report Preparation and Test Review" sections of the method manuals. At a minimum, whole effluent toxicity monitoring shall be reported as follows:

1. **Chronic WET Reporting.** Regular chronic toxicity monitoring results shall be reported to the Regional Water Board within 30 days following completion of the test, and shall contain, at minimum:
   a. The results expressed in TUc, measured as 100/NOEC, and also measured as $100/LC_{50}$, $100/EC_{25}$, $100/IC_{25}$, and $100/IC_{50}$, as appropriate.
   b. The statistical methods used to calculate endpoints;
   c. The statistical output page, which includes the calculation of the percent minimum significant difference (PMSD);
   d. The dates of sample collection and initiation of each toxicity test; and
   e. The results compared to the numeric toxicity monitoring trigger.

   Additionally, the monthly discharger self-monitoring reports shall contain an updated chronology of chronic toxicity test results expressed in TUc, and organized by test species, type of test (survival, growth or reproduction), and monitoring frequency, i.e., either quarterly, monthly, accelerated, or TRE.

2. **Acute WET Reporting.** Acute toxicity test results shall be submitted with the monthly discharger self-monitoring reports and reported as percent survival.

3. **TRE Reporting.** Reports for Toxicity Reduction Evaluations shall be submitted in accordance with the schedule contained in the Discharger's approved TRE Work Plan.

4. **Quality Assurance (QA).** The Discharger must provide the following information for QA purposes:
   a. Results of the applicable reference toxicant data with the statistical output page giving the species, NOEC, LOEC, type of toxicant, dilution water used, concentrations used, PMSD, and dates tested.
   b. The reference toxicant control charts for each endpoint, which include summaries of reference toxicant tests performed by the contracting laboratory.
   c. Any information on deviations or problems encountered and how they were dealt with.

VI. LAND DISCHARGE MONITORING REQUIREMENTS

A. Monitoring Location LND-001, Reclaimed Wastewater

1. At a minimum, the Discharger shall monitor the wastewater discharged at LND-001 as required in Table E-6. Sampling is not required during periods when no wastewater, biosolids, or these combined flows, are discharged to The Agricultural Fields.

Table E-6. Land Discharge to The Agricultural Fields Monitoring Requirements – LND-001

Parameter	Units	Sample Type	Minimum Sampling Frequency [2]
Flow	mgd & inch/acre/day	Metered or Calculated[1]	Continuous
pH	Standard Units	Grab	1/week/event
Total Dissolved Solids	mg/L	Grab	1/week/event
Fixed Dissolved Solids	mg/L	Grab	1/week/event
Electrical Conductivity	umhos/cm	Grab	1/week/event
Total Suspended Solids	mg/L	Grab	1/week/event
BOD 5-day 20ºC	mg/L & lbs/acre/day	Grab	1/week/event
Total Kjeldahl Nitrogen	mg/L & lbs/acre/day	Grab	1/week/event
Nitrate (as N)	mg/L	Grab	1/week/event
Ammonia (as N)	mg/L	Grab	1/week/event
Metals (total) [3]	ug/L & lbs/acre/day	Grab	1/month/event
Standard Minerals [4]	mg/L	Grab	1/month/event
Priority Pollutants (except those listed above) [5, 6]	ug/L	Grab	1/permit term [7]

1. The total flow directed to The Agricultural Fields shall be calculated as the sum of the following sources: a) flow pumped from storage ponds (metered), b) Industrial Line flow (metered), c) DAFT Subnatant flow (calculated), d) Biosolids Lagoon Supernatant flow (estimated), and e) biosolids (metered).
2. The minimum required sampling frequency is once per event. The maximum required sampling frequency is once per sampling period (i.e. week or month).
3. Metals shall include at least the following: arsenic, cadmium, chromium, copper, lead, magnesium, mercury, molybdenum, nickel, selenium, and zinc.
4. Standard minerals shall include the following: boron, bromide, calcium, fluoride, iron, magnesium, total potassium, sodium, chloride, total phosphorus, sulfate, total alkalinity (including alkalinity series), and total hardness as CaCO3, and include verification that the analysis is complete (i.e., cation/anion balance).
5. The Discharger shall monitor for all pollutants/constituents listed in Attachment H of this Order.
6. Semi-Volatile Organics shall be analyzed using the latest version of USEPA Method 8270.
7. Obtain representative sample of all wastewater sources tributary to irrigation line (e.g. combined wastewater from ponds, PCP, and biosolids).

B. The Agricultural Field Inspections

1. The Discharger shall inspect the land application areas at least once daily during irrigation events, and observations from those inspections shall be documented for inclusion in the monthly self-monitoring reports. The following items shall be documented for each field to be irrigated on that day:

   a. Evidence of erosion;
   b. Evidence of berm damage or erosion;
   c. Evidence of damage to standpipes and flow control valve (if applicable);
   d. Evidence of improper use of valves;
   e. Condition of head ditch;
   f. Soil saturation;
   g. Ponding;
   h. Evidence of damage to tailwater ditches and evidence of potential and actual runoff to off-site areas;

i. Evidence of potential and actual discharge to surface water;
j. Accumulation of organic solids in ditches and at soil surface;
k. Soil clogging;
l. Odors that have the potential to be objectionable at or beyond the property boundary; and
m. Evidence of fly and/or mosquito breeding.

2. Temperature; wind direction and relative strength; and other relevant field conditions shall also be observed and recorded. The notations shall also document any corrective actions taken based on observations made, including fresh water flushing of the force main and head ditches. A copy of entries made in the log during each month shall be submitted as part of the monthly self-monitoring report.

C.. Monitoring Location EFF-001, Municipal Wastewater Discharges to Storage Ponds

1. At a minimum, the Discharger shall monitor the municipal wastewater discharged to the storage ponds at Monitoring Location EFF-001 as required in Table E-7. Sampling is only required during periods when municipal wastewater is discharged to ponds.

Table E-7 Discharges of Municipal Wastewater to Storage Ponds

Parameter	Units	Sample Type	Minimum Sampling Frequency[3]
BOD 5-day @ 20°C	mg/L	24-hour composite[1]	1/week/event
Settleable Solids	mL/L	Grab	1/week/event

[1] 24-hour flow proportioned composite.

VII. RECLAMATION MONITORING REQUIREMENTS

A. Monitoring Location EFF-001

1. The Discharger shall monitor at EFF-001 during events when the tertiary level treated wastewater is supplied to the Northern California Power Agency and/or San Joaquin County Vector Control District as follows:

Table E-7a. Reclamation Monitoring Requirements – EFF-001

Parameter	Units	Sample Type	Minimum Sampling Frequency	Required Analytical Test Method
Flow	Mgd	Meter	Continuous	
BOD 5-day 20°C	mg/L	Grab	1/day	
Total Coliform Organisms	MPN/100 mL	Grab	1/day	
Total Suspended Solids	mg/L	Grab	1/day	
Turbidity	NTU	Meter	Continuous	

B. Wastewater in Storage Ponds - Monitoring Locations PND-001 through PND-004.

1. At a minimum, the Discharger shall monitor wastewater impounded in each Facility pond(s) at PND-001 through PND-004 as required in Table E-7b, below. Grab samples shall be collected from each pond during the specified sampling frequency and combined to create one composite sample.

Table E-7b. Pond(s) Monitoring Requirements

Parameter	Units	Sample Type	Minimum Sampling Frequency	Required Analytical Test Method
Dissolved Oxygen[5]	mg/L	Grab	1/week	
pH	Standard Units	Grab	1/week	
Freeboard	feet	--	1/week	
Available Storage Volume	Acre-feet	--	1/month	
BOD 5-day @ 20ºC	mg/L	Grab	1/week	
Total Dissolved Solids	mg/L	Grab	1/week	
Electrical Conductivity	umhos/cm	Grab	1/week	
Ammonia (as N)[1]	mg/L	Grab	1/month	
Nitrate (as N)	mg/L	Grab	1/month	
Nitrite (as N)	mg/L	Grab	1/month	
Metals[2]	ug/L	Grab	1/quarter	
Standard Minerals[3]	mg/L	Grab	1/quarter	
Priority Pollutants (except those listed above)[4]	ug/L	Grab	1/permit term	

1. Report as total.
2. Metals shall include at least the following: arsenic, cadmium, chromium, copper, iron, lead, mercury, molybdenum, nickel, selenium, and zinc.
3. Standard minerals shall include the following: boron, calcium, iron, magnesium, potassium, sodium, chloride, phosphorus, total alkalinity (including alkalinity series), and hardness, and include verification that the analysis is complete (i.e., cation/anion balance).
4. The Discharger shall monitor for all pollutants/constituents listed in Attachment H of this Order. Detection limits shall be equal to or less than the lowest minimum level (ML) published in Appendix 4 of the *Policy for Implementation of Toxics Standards for Inland Surface Waters, Enclosed Bays, and Estuaries of California* (known as State Implementation Plan or SIP).
5. Samples shall be collected at a depth of one foot from each pond in use, opposite the inlet. Samples shall be collected between 0700 and 0900 hours.

VIII. RECEIVING WATER MONITORING REQUIREMENTS – SURFACE WATER AND GROUNDWATER

A. Surface Water Monitoring Locations RSW-001 through RSW-005

1. During the month that discharge has occurred at Discharge Point 001, the Discharger shall monitor Dredger Cut at RSW-001 and RSW-002, Bishop Cut at RSW-003, Highline Canal at RSW-004, and White Slough at RSW-005 as follows:

Table E-8a. Receiving Water Monitoring Requirements, Surface Water

Parameter	Units	Sample Type	Minimum Sampling Frequency	Monitoring Location(s)
Dissolved Oxygen	mg/L	Grab	1/week	RSW-001 through RSW-005
pH	Standard Units	Grab	1/week	RSW-001 through RSW-005
Temperature	°F (°C)	Grab	1/week	RSW-001 through RSW-005
Electrical Conductivity @ 25°C	umhos/cm	Grab	1/week	RSW-001 through RSW-005
Total Dissolved Solids	mg/L	Grab	1/week	RSW-001 through RSW-005
Fecal Coliform Organisms	MPN/100 ml	Grab	1/month	RSW-001 through RSW-005
Turbidity	NTU	Grab	1/week	RSW-001 through RSW-005
Hardness as $CaCO_3$	mg/L	Grab	1/month	RSW-001 through RSW-005
Ammonia (as N)[1]	mg/L	Grab	1/month	RSW-001 through RSW-005
Nitrate (as N)	mg/L	Grab	1/month	RSW-001 through RSW-005
Nitrite (as N)	mg/L	Grab	1/month	RSW-001 through RSW-005
Total Kjeldahl Nitrogen (as N)	mg/L	Grab	1/month	RSW-001 through RSW-005
Total Organic Carbon	mg/L	Grab	1/month	RSW-001 through RSW-005
Total Phosphorous	mg/L	Grab	1/month	RSW-001 through RSW-005
Mercury, total [3]	ng/L	Grab	1/quarter	RSW-001 through RSW-005
Methylmercury[3]	ng/L	Grab	1/quarter	RSW-001 through RSW-005
Trihalomethanes[2, 4]	ug/L	Grab	1/quarter	RSW-001 through RSW-005
Standard minerals[5]	mg/L	Grab	1/year	RSW-001 through RSW-005

1. Temperature and pH shall be determined at the time of sample collection.
2. Detection limits shall be equal to or less than the lowest minimum level (ML) published in Appendix 4 of the *Policy for Implementation of Toxics Standards for Inland Surface Waters, Enclosed Bays, and Estuaries of California* (known as State Implementation Plan or SIP).
3. Unfiltered total mercury and methlymercury samples shall be taken using clean hands/dirty hands procedures, as described in USEPA Method 1669: *Sampling Ambient Water for Trace Metals at EPA Water Quality Criteria Levels,* for collection of equipment blanks (section 9.4.4.2), and shall be analyzed by USEPA Method 1631/1630 (Revision E) with a method detection limit of 0.2 ng/L for total mercury and 0.02 ng/L for methylmercury.
4. Trihalomethanes include bromoform, chloroform, dichlorobromomethane, and dibromochloromethane. Concentrations of each constituent shall be separately monitored and reported.
5. Standard minerals shall include the following: boron, bromide, calcium, fluoride, iron, magnesium, potassium, sodium, chloride, phosphorus, sulfate, total alkalinity (including alkalinity series), and total hardness as CaCO3, and include verification that the analysis is complete (i.e., cation/anion balance).

In conducting the receiving water sampling, a log shall be kept of the receiving water conditions throughout the reach bounded by Stations RSW-1 through RSW-5. Attention shall also be given to the presence or absence of the following:

a. Floating or suspended matter
b. Discoloration
c. Bottom deposits
d. Aquatic life
e. Visible films, sheens or coatings
f. Fungi, slimes, or objectionable growths
g. Potential nuisance conditions

Notes on receiving water conditions shall be summarized in the monitoring report.

B. Groundwater Monitoring Locations

1. The Discharger shall monitor the groundwater in existing monitoring wells WSM-1 through WSM-9, WSM-12, WSM-14 through WSM-16, and any other well subsequently installed for the study required in Provision VI.C.2.d. of this Order, or as approved by the Executive Officer.

   Prior to sampling, the groundwater elevations shall be measured and the wells shall be purged of at least three well volumes until temperature, pH and electrical conductivity have stabilized. Depth to groundwater shall be measured to the nearest 0.01 feet. Samples shall be collected and analyzed using standard USEPA methods. Groundwater monitoring shall include, at a minimum, the following:

Table E-8b. Receiving Water Monitoring Requirements, Groundwater

Parameter	Units	Sample Type	Minimum Sampling Frequency	Required Analytical Test Method
Depth to groundwater	0.01 feet	Measurement	1/quarter	
Groundwater elevation[1]	feet	Calculated	1/quarter	
Gradient magnitude	feet/feet	Calculated	1/quarter	
Gradient direction	degrees	Calculated	1/quarter	
pH	Standard Units	Grab	1/quarter	
Total dissolved solids	mg/L	Grab	1/quarter	
Fixed dissolved solids	mg/L	Grab	1/quarter	
Electrical conductivity at 25ºC	umhos/cm	Grab	1/quarter	
Chloride	mg/L	Grab	1/quarter	
Sodium	mg/L	Grab	1/quarter	
Total Kjeldahl nitrogen	mg/L	Grab	1/quarter	
Nitrate (as N)	mg/L	Grab	1/quarter	
Nitrite (as N)	mg/L	Grab	1/quarter	
Ammonia (as NH_4)	mg/L	Grab	1/quarter	
Boron	mg/L	Grab	1/quarter	
Dissolved iron[2]	mg/L	Grab	1/quarter	
Dissolved lead[2]	mg/L	Grab	1/quarter	
Dissolved manganese[2]	mg/L	Grab	1/quarter	
Total coliform organisms	MPN/100 mL	Grab	1/quarter	
Trihalomethanes[4]	ug/L	Grab	1/quarter	
Standard Minerals[3]	mg/L	Grab	1/quarter	
Priority Pollutants (except those listed above)[4, 5]	ug/L	Grab	1/permit term	

1 Groundwater elevation shall be determined based on depth-to-water measurements using a surveyed measuring point elevation on the well and a surveyed reference elevation.
2 Samples shall be filtered with a 0.45-micron filter prior to sample preservation.
3 Standard minerals shall include the following: boron, bromide, calcium, fluoride, iron, magnesium, potassium, sodium, chloride, phosphorus, sulfate, total alkalinity (including alkalinity series), and total hardness as CaCO3, and include verification that the analysis is complete (i.e., cation/anion balance).
4. Detection limits shall be equal to or less than the lowest minimum level (ML) published in Appendix 4 of the *Policy for Implementation of Toxics Standards for Inland Surface Waters, Enclosed Bays, and Estuaries of California* (known as State Implementation Plan or SIP).
5. The Discharger shall monitor for all pollutants/constituents listed in Attachment H of this Order.

IX. OTHER MONITORING REQUIREMENTS

A. Municipal Water Supply

1. **Monitoring Location S-001**
   The Discharger shall characterize source water adequately to evaluate compliance with salinity goals where a representative sample of the municipal water supply can be obtained. Monitoring shall include at least the following.

Table E-9. Municipal Water Supply Monitoring Requirements

Parameter	Units	Sample Type	Minimum Sampling Frequency	Required Analytical Test Method
Total Dissolved Solids	mg/L	Grab	1/year	
Electrical Conductivity @ 25°C[1]	umhos/cm	Grab	1/year	
Standard Minerals[2]	mg/L	Grab	1/three years	

1 If the water supply is from more than one source, the EC shall be reported as a weighted average and include copies of supporting calculations.

2 Standard minerals shall include all major cations and anions and include verification that the analysis is complete (i.e., cation/anion balance).

X. REPORTING REQUIREMENTS

A. General Monitoring and Reporting Requirements

1. The Discharger shall comply with all Standard Provisions (Attachment D) related to monitoring, reporting, and recordkeeping.

2. Upon written request of the Regional Water Board, the Discharger shall submit a summary monitoring report. The report shall contain both tabular and graphical summaries of the monitoring data obtained during the previous year(s).

3. **Compliance Time Schedules.** For compliance time schedules included in the Order, the Discharger shall submit to the Regional Water Board, on or before each compliance due date, the specified document or a written report detailing compliance or noncompliance with the specific date and task. If noncompliance is reported, the Discharger shall state the reasons for noncompliance and include an estimate of the date when the Discharger will be in compliance. The Discharger shall notify the Regional Water Board by letter when it returns to compliance with the compliance time schedule.

4. The Discharger shall report to the Regional Water Board any toxic chemical release data it reports to the State Emergency Response Commission within 15 days of reporting the data to the Commission pursuant to section 313 of the "Emergency Planning and Community Right to Know Act of 1986.

5. **Reporting Protocols.** The Discharger shall report with each sample result the applicable Reporting Level (RL) and the current Method Detection Limit (MDL), as determined by the procedure in Part 136.

The Discharger shall report the results of analytical determinations for the presence of chemical constituents in a sample using the following reporting protocols:

a. Sample results greater than or equal to the RL shall be reported as measured by the laboratory (i.e., the measured chemical concentration in the sample).

b. Sample results less than the RL, but greater than or equal to the laboratory's MDL, shall be reported as "Detected, but Not Quantified," or DNQ. The estimated chemical concentration of the sample shall also be reported.

   For the purposes of data collection, the laboratory shall write the estimated chemical concentration next to DNQ as well as the words "Estimated Concentration" (may be shortened to "Est. Conc."). The laboratory may, if such information is available, include numerical estimates of the data quality for the reported result. Numerical estimates of data quality may be percent accuracy (± a percentage of the reported value), numerical ranges (low to high), or any other means considered appropriate by the laboratory.

c. Sample results less than the laboratory's MDL shall be reported as "Not Detected," or ND.

d. Dischargers are to instruct laboratories to establish calibration standards so that the ML value (or its equivalent if there is differential treatment of samples relative to calibration standards) is the lowest calibration standard. At no time is the Discharger to use analytical data derived from *extrapolation* beyond the lowest point of the calibration curve.

6. **Multiple Sample Data.** When determining compliance with an AMEL , AWEL, or MDEL for priority pollutants and more than one sample result is available, the Discharger shall compute the arithmetic mean unless the data set contains one or more reported determinations of "Detected, but Not Quantified" (DNQ) or "Not Detected" (ND). In those cases, the Discharger shall compute the median in place of the arithmetic mean in accordance with the following procedure:

   a. The data set shall be ranked from low to high, ranking the reported ND determinations lowest, DNQ determinations next, followed by quantified values (if any). The order of the individual ND or DNQ determinations is unimportant.

   b. The median value of the data set shall be determined. If the data set has an odd number of data points, then the median is the middle value. If the data set has an even number of data points, then the median is the average of the two values around the middle unless one or both of the points are ND or DNQ, in which case the median value shall be the lower of the two data points where DNQ is lower than a value and ND is lower than DNQ.

B. Self Monitoring Reports (SMRs)

1. At any time during the term of this permit, the State or Regional Water Board may notify the Discharger to electronically submit Self-Monitoring Reports (SMRs) using

the State Water Board's California Integrated Water Quality System (CIWQS) Program Web site (http://www.waterboards.ca.gov/ciwqs/index.html). Until such notification is given, the Discharger shall submit hard copy SMRs. The CIWQS Web site will provide additional directions for SMR submittal in the event there will be service interruption for electronic submittal.

2. Monitoring results shall be submitted to the Regional Water Board by the **first day** of the second month following sample collection. Quarterly and annual monitoring results shall be submitted by the **first day of the second month following each calendar quarter, semi-annual period, and year**, respectively.

3. In reporting the monitoring data, the Discharger shall arrange the data in tabular form so that the date, the constituents, and the concentrations are readily discernible. The data shall be summarized in such a manner to illustrate clearly whether the discharge complies with waste discharge requirements. The highest daily maximum for the month, monthly and weekly averages, and medians, and removal efficiencies (%) for BOD and Total Suspended Solids, shall be determined and recorded as needed to demonstrate compliance.

4. With the exception of flow, all constituents monitored on a continuous basis (metered), shall be reported as daily maximums, daily minimums, and daily averages; flow shall be reported as the total volume discharged per day for each day of discharge.

5. If the Discharger monitors any pollutant at the locations designated herein more frequently than is required by this Order, the results of such monitoring shall be included in the calculation and reporting of the values required in the discharge monitoring report form. Such increased frequency shall be indicated on the discharge monitoring report form.

6. For reporting the land discharge specifications and applicable limitations of this Order, at a minimum, the self-monitoring report shall be submitted monthly, and the report shall include:

   a. The monthly results of the required monitoring in this MRP for the industrial influent (Section III.B), pond (Section VII.B), supplemental irrigation supply (when applicable), groundwater (Section VIII.B), and all land application area monitoring (Section VI). Data shall be presented in tabular format.

   b. Daily precipitation data in tabular form accompanied by starting and ending dates of irrigation for each field.

   c. Daily field inspection reports, during periods when land application operations is conducted, including records of the date and time.

   d. A comparison of monitoring data to the discharge specifications and applicable limitations and an explanation of any violation of those requirements.

   e. Daily discharge volumes and acres irrigated shall be tabulated. The report shall include discharge volumes and irrigation practices used (water source, method of

application, application period/duration, drying times, etc.) for each field or group of fields utilized during the month. **Hydraulic loading rates** (inches/acre/month) shall be calculated.

f. **Maximum daily BOD_5 loading rates** (lbs/acre/day) shall be calculated for each irrigation field using the total volume applied on the day of application, estimated application area, and a running average of the three most recent results of BOD_5 for the applicable source water, which also shall be reported along with supporting calculations. **Cycle average BOD_5 loading rates** shall be calculated using the total volume applied on the day of application, the number of days between applications, the total application period, application area, and a running average of the three most recent results of BOD_5 for the applicable source wastewater.

g. **Total nitrogen and Total metals** (lbs/acre/month) shall be calculated for each irrigation field on monthly basis using the daily applied volume of wastewater, daily application area, and the most recent monitoring results, which shall also be reported along with supporting calculations.

h. **Nitrogen loading rates** for other sources (i.e., fertilizers) shall be calculated for each irrigation field on a monthly basis using the daily applied load and the estimated daily application area.

i. **Cumulative nitrogen and Cumulative metals** for each irrigation field for the calendar year to date shall be calculated as a running total of monthly loadings to date from all sources.

7. A letter transmitting the self-monitoring reports shall accompany each report. Such a letter shall include a discussion of requirement violations found during the reporting period, and actions taken or planned for correcting noted violations, such as operation or facility modifications. If the Discharger has previously submitted a report describing corrective actions and/or a time schedule for implementing the corrective actions, reference to the previous correspondence will be satisfactory. The transmittal letter shall contain the penalty of perjury statement by the Discharger, or the Discharger's authorized agent, as described in the Standard Provisions.

8. SMRs must be submitted to the Regional Water Board, signed and certified as required by the Standard Provisions (Attachment D), to the address listed below:

   Regional Water Quality Control Board
   Central Valley Region
   11020 Sun Center Dr., Suite #200
   Rancho Cordova, CA 95670-6114

9. Monitoring periods and reporting for all required monitoring shall be completed according to the following schedule:

Table E-10. Monitoring Periods and Reporting Schedule

Sampling Frequency	Monitoring Period Begins On…	Monitoring Period	SMR Due Date
Continuous	**Effective date of this Order**	**All**	**First day of second calendar month following month of sampling.**
1/day	**Effective date of this Order**	**(Midnight through 11:59 PM) or any 24-hour period that reasonably represents a calendar day for purposes of sampling.**	**First day of second calendar month following month of sampling.**
1/week	**Sunday following permit effective date**	**Sunday through Saturday**	**First day of second calendar month following month of sampling.**
1/month	**First day of calendar month following permit effective date**	**1st day of calendar month through last day of calendar month**	**First day of second calendar month following month of sampling.**
1/quarter	**Closest of January 1, April 1, July 1, or October 1 following (or on) permit effective date**	**January 1 through March 31 April 1 through June 30 July 1 through September 30 October 1 through December 31**	**May 1 August 1 November 1 February 1**
2/year	**Closest of January 1 or July 1 following (or on) permit effective date**	**January 1 through June 30 July 1 through December 31**	**August 1 February 1**
1/year	**January 1 following (or on) permit effective date**	**January 1 through December 31**	**February 1**
1/permit term	**Effective date of this Order**	**Not applicable**	**First day of second calendar month following month of sampling.**

C. Discharge Monitoring Reports (DMRs)

1. As described in Section X.B.1 above, at any time during the term of this permit, the State or Regional Water Board may notify the Discharger to electronically submit SMRs that will satisfy federal requirements for submittal of Discharge Monitoring Reports (DMRs). Until such notification is given, the Discharger shall submit DMRs in accordance with the requirements described below.

2. DMRs must be signed and certified as required by the standard provisions (Attachment D). The Discharger shall submit the original DMR and one copy of the DMR to the address listed below:

STANDARD MAIL	FEDEX/UPS/ OTHER PRIVATE CARRIERS
State Water Resources Control Board Division of Water Quality c/o DMR Processing Center PO Box 100 Sacramento, CA 95812-1000	State Water Resources Control Board Division of Water Quality c/o DMR Processing Center 1001 I Street, 15th Floor Sacramento, CA 95814

3. All discharge monitoring results must be reported on the official USEPA pre-printed DMR forms (EPA Form 3320-1). Forms that are self-generated or modified cannot be accepted unless they follow the exact same format as EPA form 3320-1.

D. Other Reports

1. **Progress Reports.** As specified in the compliance time schedules required in Special Provisions VI.C., progress reports shall be submitted in accordance with the following reporting requirements. At minimum, the progress reports shall include a discussion of the status of final compliance, whether the Discharger is on schedule to meet the final compliance date, and the remaining tasks to meet the final compliance date.

Table E-11. Reporting Requirements for Special Provisions Progress Reports

Special Provision	Reporting Requirements
Temperature Study (Special Provisions VI.C.2.b)	**1 February,** annually, after approval of work plan
Industrial Influent Characterization Study (Special Provisions VI.C.2.c)	**1 February,** annually, after approval of work plan
Background Groundwater Quality and Degradation Assessment Study (Special Provisions VI.C.2.d)	**1 February,** annually, after approval of work plan
Mercury Pollution Prevention Plan (Special Provisions VI.C.3.a.)	**1 August**, annually, after approval of work plan.
Salinity Evaluation and Minimization Plan (Special provisions VI.C.3.b)	**1 August**, annually, after approval of the Salinity Evaluation and Minimization Plan.
Compliance Schedules for Final Effluent Limitations for aluminum, ammonia, chlorodibromomethane, and dichlorobromomethane, compliance with final effluent limitations (Special Provisions VI.C.7.a.ii.)	**1 August**, annually, until final compliance
Compliance Schedules for Final Effluent Limitations for aluminum, chlorodibromomethane, and dichlorobromomethane, Pollution Prevention Plan (Special Provisions VI.C.7.a.iii)	**1 August**, annually, after approval of work plan until final compliance
Compliance Schedules for Final Effluent Limitations for aluminum, ammonia, chlorodibromomethane, and dichlorobromomethane, Treatment Feasibility Study (Special Provisions VI.C.7.a.iv)	**1 August**, annually, after approval of work plan until final compliance

2. **Annual Operations Report**. By **30 January** of each year, the Discharger shall submit a written report to the Executive Officer containing the following:

   a. The names, certificate grades, and general responsibilities of all persons employed at the Facility.

   b. The names and telephone numbers of persons to contact regarding the plant for emergency and routine situations.

   c. A statement certifying when the flow meter(s) and other monitoring instruments and devices were last calibrated, including identification of who performed the calibration.

   d. A statement certifying whether the current operation and maintenance manual, and contingency plan, reflect the wastewater treatment plant as currently constructed and operated, and the dates when these documents were last revised and last reviewed for adequacy.

   e. The Discharger may also be requested to submit an annual report to the Regional Water Board with both tabular and graphical summaries of the monitoring data obtained during the previous year. Any such request shall be made in writing. The report shall discuss the compliance record. If violations have occurred, the report shall also discuss the corrective actions taken and planned to bring the discharge into full compliance with the waste discharge requirements.

3. **Annual Pretreatment Reporting Requirements.** The Discharger shall submit annually a report to the Regional Water Board, with copies to USEPA Region 9 and the State Water Board, describing the Discharger's pretreatment activities over the previous 12 months. In the event that the Discharger is not in compliance with any conditions or requirements of this Order, including noncompliance with pretreatment audit/compliance inspection requirements, then the Discharger shall also include the reasons for noncompliance and state how and when the Discharger shall comply with such conditions and requirements.

   An annual report shall be submitted by **28 February** and include at least the following items:

   a. A summary of analytical results from representative, flow proportioned, 24-hour composite sampling of the POTW's influent and effluent for those pollutants USEPA has identified under Section 307(a) of the CWA which are known or suspected to be discharged by industrial users.

      Sludge shall be sampled during the same 24-hour period and analyzed for the same pollutants as the influent and effluent sampling and analysis. The sludge analyzed shall be a composite sample of a minimum of 12 discrete samples taken at equal time intervals over the 24-hour period. Wastewater and sludge sampling and analysis shall be performed at least annually. The discharger shall

also provide any influent, effluent or sludge monitoring data for nonpriority pollutants which may be causing or contributing to Interference, Pass-Through or adversely impacting sludge quality. Sampling and analysis shall be performed in accordance with the techniques prescribed in CFR Part 136 and amendments thereto.

b. A discussion of Upset, Interference, or Pass-Through incidents, if any, at the treatment plant, which the Discharger knows or suspects were caused by industrial users of the POTW. The discussion shall include the reasons why the incidents occurred, the corrective actions taken and, if known, the name and address of, the industrial user(s) responsible. The discussion shall also include a review of the applicable pollutant limitations to determine whether any additional limitations, or changes to existing requirements, may be necessary to prevent Pass-Through, Interference, or noncompliance with sludge disposal requirements.

c. The cumulative number of industrial users that the Discharger has notified regarding Baseline Monitoring Reports and the cumulative number of industrial user responses.

d. An updated list of the Discharger's industrial users including their names and addresses, or a list of deletions and additions keyed to a previously submitted list. The Discharger shall provide a brief explanation for each deletion. The list shall identify the industrial users subject to federal categorical standards by specifying which set(s) of standards are applicable. The list shall indicate which categorical industries, or specific pollutants from each industry, are subject to local limitations that are more stringent than the federal categorical standards. The Discharger shall also list the noncategorical industrial users that are subject only to local discharge limitations. The Discharger shall characterize the compliance status through the year of record of each industrial user by employing the following descriptions:

   i. complied with baseline monitoring report requirements (where applicable);
   ii. consistently achieved compliance;
   iii. inconsistently achieved compliance;
   iv. significantly violated applicable pretreatment requirements as defined by CFR Part 403.8(f)(2)(vii);
   v. complied with schedule to achieve compliance (include the date final compliance is required);
   vi. did not achieve compliance and not on a compliance schedule; and
   vii. compliance status unknown.

   A report describing the compliance status of each industrial user characterized by the descriptions in items iii. through vii. above shall be submitted for each calendar quarter **within 21 days of the end of the quarter**. The report shall identify the specific compliance status of each such industrial user and shall also identify the compliance status of the POTW with regards to audit/pretreatment compliance inspection requirements. If none of the aforementioned conditions

exist, at a minimum, a letter indicating that all industries are in compliance and no violations or changes to the pretreatment program have occurred during the quarter must be submitted. The information required in the fourth quarter report shall be included as part of the annual report. This quarterly reporting requirement shall commence upon issuance of this Order.

e. A summary of the inspection and sampling activities conducted by the Discharger during the past year to gather information and data regarding the industrial users. The summary shall include:

   i. the names and addresses of the industrial users subjected to surveillance and an explanation of whether they were inspected, sampled, or both and the frequency of these activities at each user; and
   ii. the conclusions or results from the inspection or sampling of each industrial user.

f. A summary of the compliance and enforcement activities during the past year. The summary shall include the names and addresses of the industrial users affected by the following actions:

   i. Warning letters or notices of violation regarding the industrial users' apparent noncompliance with federal categorical standards or local discharge limitations. For each industrial user, identify whether the apparent violation concerned the federal categorical standards or local discharge limitations.
   ii. Administrative orders regarding the industrial users noncompliance with federal categorical standards or local discharge limitations. For each industrial user, identify whether the violation concerned the federal categorical standards or local discharge limitations.
   iii. Civil actions regarding the industrial users' noncompliance with federal categorical standards or local discharge limitations. For each industrial user, identify whether the violation concerned the federal categorical standards or local discharge limitations.
   iv. Criminal actions regarding the industrial users noncompliance with federal categorical standards or local discharge limitations. For each industrial user, identify whether the violation concerned the federal categorical standards or local discharge limitations.
   v. Assessment of monetary penalties. For each industrial user identify the amount of the penalties.
   vi. Restriction of flow to the POTW.
   vii. Disconnection from discharge to the POTW.

g. A description of any significant changes in operating the pretreatment program which differ from the information in the Discharger's approved Pretreatment Program including, but not limited to, changes concerning: the program's administrative structure, local industrial discharge limitations, monitoring program or monitoring frequencies, legal authority or enforcement policy, funding mechanisms, resource requirements, or staffing levels.

h. A summary of the annual pretreatment budget, including the cost of pretreatment program functions and equipment purchases.

Duplicate signed copies of these Pretreatment Program reports shall be submitted to the Regional Water Board and the:

State Water Resources Control Board
Division of Water Quality
P.O. Box 944213
Sacramento, CA 94244-2130

and the

Regional Administrator
U.S. Environmental Protection Agency W-5
75 Hawthorne Street
San Francisco, CA 94105

4. **Cropping And Irrigation Annual Monitoring Report and Plan**
An Annual Report shall be prepared and shall include all monitoring data required in the monitoring schedule applicable land applications, including pond and groundwater monitoring. The Annual Report shall be submitted to the Regional Water Board by **1 February** each year. In addition to the data normally presented, the Annual Report shall include the following:

a. Tabular and graphical summaries of historical monthly total loading rates for water (hydraulic loading in gallons and inches), BOD, total nitrogen, fixed dissolved solids, and total dissolved solids (TDS).

b. The flow-weighted average TDS concentration shall be calculated based on flow, effluent, and supplemental irrigation water monitoring results for the year.

c. A mass balance relative to constituents of concern and hydraulic loading along with supporting data and calculations. The report shall describe the types of crops planted and dates of planting and harvest for each crop.

d. For each violation of the Discharge Specifications, applicable Prohibitions, and Groundwater Limitations of this Order, the report shall describe in detail the nature of the violation, date(s) of occurrence, cause(s), mitigation or control measures taken to prevent or stop the violation, and additional operational or facility modifications that will be made to ensure that the violation does not occur in the following year.

e. A comprehensive evaluation of the effectiveness of the past year's wastewater application operation in terms of odor control, including consideration of application management practices (i.e. waste constituent and hydraulic loadings, application cycles, drying times, and cropping practices), and groundwater monitoring data.

f. A discussion of compliance and the corrective action taken, as well as any planned or proposed actions needed to bring the land application discharge, or groundwater limits, into full compliance with the requirements in this Order.

g. A discussion of any data gaps and potential deficiencies/redundancies in the monitoring system or reporting program.

h. Based on this information, the Discharger shall develop and include a Cropping and Irrigation plan for the following season.

ATTACHMENT F – FACT SHEET

Table of Contents

Attachment F – Fact Sheet F-3
I. Permit Information F-3
II. Facility Description F-4
A. Description of Wastewater and Biosolids Treatment or Controls F-4
B. Discharge Points and Receiving Waters F-5
C. Summary of Existing Requirements and Self-Monitoring Report (SMR) Data F-6
D. Compliance Summary F-8
E. Planned Changes F-8
III. Applicable Plans, Policies, and Regulations F-9
A. Legal Authority F-9
B. California Environmental Quality Act (CEQA) F-9
C. State and Federal Regulations, Policies, and Plans F-9
D. Impaired Water Bodies on CWA 303(d) List F-13
E. Other Plans, Polices and Regulations F-14
IV. Rationale For Effluent Limitations and Discharge Specifications F-14
A. Discharge Prohibitions F-15
B. Technology-Based Effluent Limitations F-16
1. Scope and Authority F-16
2. Applicable Technology-Based Effluent Limitations F-17
C. Water Quality-Based Effluent Limitations (WQBELs) F-18
1. Scope and Authority F-18
2. Applicable Beneficial Uses and Water Quality Criteria and Objectives F-18
3. Determining the Need for WQBELs F-20
4. WQBEL Calculations F-43
5. Whole Effluent Toxicity (WET) F-46
D. Final Effluent Limitations F-48
1. Mass-based Effluent Limitations F-48
2. Averaging Periods for Effluent Limitations F-48
3. Satisfaction of Anti-Backsliding Requirements F-48
4. Satisfaction of Antidegradation Policy F-50
E. Interim Effluent Limitations F-55
F. Land Discharge Specifications F-56
G. Reclamation Specifications F-58
V. Rationale for Receiving Water Limitations F-59
A. Surface Water F-59
B. Groundwater F-61
VI. Rationale for Monitoring and Reporting Requirements F-62
A. Influent Monitoring F-62
B. Effluent Monitoring F-62
C. Whole Effluent Toxicity Testing Requirements F-63
D. Receiving Water Monitoring F-63
1. Surface Water F-63
2. Groundwater F-63

E. Other Monitoring Requirements F-63
1. Discharges to Land Monitoring F-66
2. Reclamation Monitoring – Location EFF-001 ..... F-66
3. Reclamation Monitoring – Wastewater in Ponds F-66
4. Municipal Water Supply Monitoring F-66
VII. Rationale for Provisions F-65
A. Standard Provisions F-65
B. Special Provisions F-66
1. Reopener Provisions F-66
2. Special Studies and Additional Monitoring Requirements F-68
3. Best Management Practices and Pollution Prevention F-74
4. Construction, Operation, and Maintenance Specifications F-75
5. Special Provisions for Municipal Facilities (POTWs Only) F-75
6. Other Special Provisions F-76
7. Compliance Schedules F-76
VIII. Public Participation F-77
A. Notification of Interested Parties F-77
B. Written Comments F-77
C. Public Hearing F-77
D. Waste Discharge Requirements Petitions F-78
E. Information and Copying F-78
F. Register of Interested Persons F-78
G. Additional Information F-78

List of Tables

Table F-1. Facility Information F-3
Table F-2. Historic Effluent Limitations and Monitoring Data F-6
Table F-3. Summary of Technology-based Effluent Limitations F-17
Table F-4. Salinity Water Quality Criteria/Objectives F-35
Table F-5. Summary of Reasonable Potential Analysis F-39
Table F-6. Water Quality Calculations for Aluminum F-44
Table F-7. Water Quality Calculations for Ammonia F-44
Table F-8. Water Quality Calculations for Dichlorobromomethane F-45
Table F-9. Water Quality Calculations for Dibromochloromethane F-45
Table F-10. Summary of Water Quality-based Effluent Limitations F-45
Table F-11 Antidegradation Analysis F-53
Table F-12. Interim Effluent Limitation Calculation Summary F-55
Table F-13. Estimated BOD Loading to The Agricultural Fields F-57

ATTACHMENT F – FACT SHEET

As described in section II of this Order, this Fact Sheet includes the legal requirements and technical rationale that serve as the basis for the requirements of this Order.

This Order has been prepared under a standardized format to accommodate a broad range of discharge requirements for Dischargers in California. Only those sections or subsections of this Order that are specifically identified as "not applicable" have been determined not to apply to this Discharger. Sections or subsections of this Order not specifically identified as "not applicable" are fully applicable to this Discharger.

I. PERMIT INFORMATION

The following table summarizes administrative information related to the facility.

Table F-1. Facility Information

WDID	5B390103002
Discharger	City of Lodi
Name of Facility	White Slough Water Pollution Control Facility, Lodi
Facility Address	12751 North Thornton Road
	Lodi, CA 95242
	San Joaquin County
Facility Contact, Title and Phone	Del Kerlin, Wastewater Treatment Superintendent (209) 333-6869
Authorized Person to Sign and Submit Reports	Del Kerlin, Wastewater Treatment Superintendent (209) 333-6869
Mailing Address	1331 South Ham Lane, Lodi, CA 95242
Billing Address	221 West Pine Street, Lodi, CA 95240
Type of Facility	Publicly Owned Treatment Works (POTW)
Major or Minor Facility	Major
Threat to Water Quality	Category 1
Complexity	Category A
Pretreatment Program	Y
Reclamation Requirements	Producer
Facility Permitted Flow	7.0 mgd(1)
Facility Design Flow	8.5 mgd
Watershed	Sacramento-San Joaquin Delta
Receiving Water	Dredger Cut
Receiving Water Type	Sacramento-San Joaquin Delta

(1). Effective immediately, the design and permitted treatment capacity is 7.0 mgd. Upon inclusion, and subsequent treatment and discharge, of wastewater flows from San Joaquin County Flag City service area, the permitted flow may increase to 7.2 mgd. Upon compliance with Special Provisions VI.C.7.b., the permitted flow may increase to 8.5 mgd.

A. City of Lodi (hereinafter Discharger) is the owner and operator of White Slough Water Pollution Control Facility (hereinafter Facility), a publicly owned treatment works (POTW).

For the purposes of this Order, references to the "discharger" or "permittee" in applicable federal and state laws, regulations, plans, or policy are held to be equivalent to references to the Discharger herein.

B. The Facility discharges wastewater to Dredger Cut, located within the Sacramento-San Joaquin Delta, a water of the United States, and is currently regulated by Order 5-00-031, which was adopted on 28 January 2000, and expired on 28 January 2005. The terms and conditions of the current Order have been automatically continued and remain in effect until new Waste Discharge Requirements (WDRs) and National Pollutant Discharge Elimination System (NPDES) permit are adopted pursuant to this Order.

C. The Discharger filed a report of waste discharge and submitted an application for renewal of its WDRs and NPDES permit on 28 July 2004. The application was deemed complete on 28 January 2005.

II. FACILITY DESCRIPTION

A. Description of Wastewater and Biosolids Treatment or Controls

1. The Discharger owns and operates two separate wastewater collection systems, one to collect municipal wastewater and another to collect industrial wastewater. The municipal wastewater collection system has 23,000 service laterals and consists of 178 miles of collection mains, 2,880 manholes, 7 lift stations, and 5 miles of trunk line delivering wastewater to the Facility for treatment and disposal. Dischargers to the domestic trunk line include a present population of approximately 63,000, businesses, and some industries within the City of Lodi. The industrial wastewater collection system has 5 service laterals, 4.1 miles of mains, 43 manholes, 1 lift station, and 5 miles of trunk line delivering wastewater to the Facility. The industrial wastewater collection system accepts primarily food processing wastewater from Pacific Coast Producers (PCP), a large canning facility. PCP comprises approximately 90% of the industrial waste flow during the summer months. The remaining industries that discharge to the industrial line include Holz Rubber Company, Valley Industries, M&R Packing, Lodi Iron Works, Chevron, and Van Ruiten Winery. Wastewater from the industrial line does not receive treatment at the Facility. It is either discharged directly to the irrigation fields during the irrigation season or stored in ponds at the Facility during the non-irrigation season.

2. The Facility's design daily average flow capacity is 8.5 mgd, and the maximum daily flow rate was 8.0 mgd. The Facility provides tertiary level treatment of the municipal wastewater that is discharged to Dredger Cut during September through May (non-growing season); during the remainder of the year, the treated municipal wastewater is pumped to the Facility's 40-acres of storage ponds. Additionally, throughout the

year, tertiary level treated municipal wastewater that complies with Title 22, *Uses of Recycled Water,* is supplied to San Joaquin County Vector Control District and to a power generation facility (Northern California Power Agency) for use as cooling water in a closed loop system. The cooling tower blowdown from the cogeneration facility is returned to the headworks of the Facility's treatment systems.

3. During the summer months, the untreated industrial wastewater stream, which includes the cannery waste from Pacific Coast Producers, is blended with the Facility's storage pond wastewater (some applications also include mixing with the biosolid slurry) and then applied to the Discharger's agricultural fields. During the non-growing season, when the flow is significantly less, because it does not contain the cannery waste, the industrial wastewater stream is stored in the Facility's ponds.

4. The Facility's treatment process consists of comminutors, mechanical grit removal, primary sedimentation, conventional activated sludge, secondary sedimentation, tertiary treatment through cloth media filtration to 10 microns, and ultraviolet pathogen deactivation. Biosolids are anaerobically digested, and then directed to a concrete-lined sludge stabilization lagoon. Fluids are decanted from this lagoon, and stored in the Facility's ponds. During the summer months, the biosolids are pumped from the sludge stabilization lagoon at a solids content of about 2 to 4 percent, then blended with the Facility's storage ponds combined wastewaters (i.e. municipal wastewater, industrial wastewater, subnatant from its WAS air flotation thickener, and sludge supernatant), and applied to approximately 790 acres of the Discharger's agricultural fields. The Discharger owns 1034 acres; however, only 790 acres are being farmed. Of this farmed area (hereinafter The Agricultural Fields), approximately 225 acres receive biosolids on an annual basis. The biosolids application area is rotated throughout The Agricultural Fields from year to year. The Agricultural Fields are used to grow fodder and feed crops that are not used directly for human consumption. The tailwater and stormwater from The Agricultural Fields are captured and returned to the Facility's storage ponds. Currently, a network of 16 monitoring wells monitor groundwater beneath The Agricultural Fields as well as the Facility. This Order requires the Discharger to install additional monitoring wells to characterize background groundwater quality (see Provisions VI.C.2.d, Background Groundwater Quality and Groundwater Degradation Assessment Study).

5. This Order regulates the tertiary level treated municipal wastewater discharged to Dredger Cut at Discharge Point 001, and supplied to Northern California Power Agency and San Joaquin County Vector Control District at Discharge Point 002. This Order also regulates all wastewater and biosolids applied to The Agricultural Fields at Discharge Point 003.

B. Discharge Points and Receiving Waters

1. The Facility is located in Section 23, T3N, R5E, MDB&M, as shown in Attachment B, a part of this Order.

2. During the non-growing season (generally mid-October through mid-April), the Facility discharges tertiary treated municipal wastewater to Dredger Cut at **Discharge Point 001**, located 1.5-miles southwest of the Facility at a point Latitude 38°, 5', 35" N and Longitude 121°, 22', 48" W. Dredger Cut, a water of the United States near the confluence of Bishop Cut and White Slough. Dredger Cut is a dead end slough that does not receive up stream flow except for stormwater or agricultural runoff from the surrounding area.

3. The Facility and Discharge Point 001 are within the 1992 Legal Boundary of the Sacramento-San Joaquin Delta Watershed Management Area, Section 12220 of the California Water Code.

4. During the remainder of the year, the Discharger mixes the treated municipal effluent with untreated industrial wastewater influent, wastewater from the storage ponds, and sometimes biosolids, for irrigation of The Agricultural Fields through **Discharge Points 003.**

5. Year round, the Discharger supplies treated municipal wastewater that complies with Title 22 CCR, Section 60301.230, *Disinfected Tertiary Recycled Water,* to Northern California Power Agency and San Joaquin County Vector Control District through **Discharge Point 002**, at a point Latitude 38°, 5', 23" N and Longitude 121°, 23', 7" W.

C. Summary of Existing Requirements and Self-Monitoring Report (SMR) Data

Effluent limitations contained in the existing Order for discharges from Discharge Point 001 (Monitoring Location EFF-001) and representative monitoring data from the term of the previous Order are as follows:

Table F-2. Historic Effluent Limitations and Monitoring Data

Parameter	Units	Effluent Limitation			Monitoring Data – Tertiary Level Treatment (From 2/2/05 To 8/8/06)		
		Average Monthly	Average Weekly	Maximum Daily	Highest Average Monthly Discharge	Highest Average Weekly Discharge	Highest Daily Discharge
BOD[1]	mg/L	10	20	30	3.2	10.1	14
BOD[1] Minimum Monthly Removal	%	85	--	--	99.4	Lowest Monthly Removal: 97.5	
TSS	mg/L	20	40	50	4.9	6.9	20
TSS Minimum Monthly Removal	%	85	--	--	99.7	Lowest Monthly Removal: 98.3	
Settleable Solids	ml/L	--	--	0.1	--	--	0.0
Temperature	ºF	<= Receiving Water plus 20 ºF			--	--	81
pH	SU	Minimum: 6.5		Maximum: 8.5	Minimum: 6.4		Maximum: 7.7
Dry Weather Flow	mgd	7.0	--	--	6.5	--	--
Chlorine Residual	mg/L	--	0.01	0.019	--	--	0

Parameter	Units	Effluent Limitation			Monitoring Data – Tertiary Level Treatment (From 2/2/05 To 8/8/06)		
		Average Monthly	Average Weekly	Maximum Daily	Highest Average Monthly Discharge	Highest Average Weekly Discharge	Highest Daily Discharge
Oil and Grease	mg/L	10	--	15	0.8	--	1
Dissolved Oxygen	mg/L	--	Minimum Daily Avg: 5		--	Lowest Daily Avg: 7	
Total Coliform Organisms	MPN/ 100ml	--	2.2[2]	23	--	78.6[2]	300[2]
Turbidity	NTU	Daily Average: 2		10	Daily Average: 2		5.4
Cyanide, total	ug/L	5.2	--	10	<5	--	<5
Zinc, total	ug/L	--	--	101	--	--	69
Lead, total	ug/L	3.7	--	--	<2	--	--
Lindane	ug/L	--	--	ND	--	--	<0.012
Acute Toxicity	%	1-sample not to fall below 70% and 3-sample median not to fall below 90% survival.			Minimum Single Sample: 80 Minimum 3-sample median: 85		
Electric Conductivity	umho s/cm	--	--	--	663	--	770
TDS	mg/L	--	--	--	--	--	540
NH_3 - N	mg/L	--	--	--	6.0	--	6.0
Mercury	ug/L	--	--	--	--	--	0.0072

[1] 5-day, 20ºC biochemical oxygen demand
[2] 7-day median

Parameter (units)	Effluent Limitation			Monitoring Data – Secondary Level Treatment (From 5/1/00 To 11/1/05)		
	Average Monthly	Average Weekly	Maximum Daily	Highest Average Monthly Discharge	Highest Average Weekly Discharge	Highest Daily Discharge
Flow (mgd)	7.0			6.5		7.7
pH (std units)			6.5 – 8.5			6.3
BOD (mg/L)	10	20	30	12		28
TSS (mg/L)	10	20	30	9.5		67
CL2 (mg/L)		.01	.019			
Turbidity (NTU)	2		10			
Temperature (ºF)			+20	27.5		
SS (ml/L)			0.1			
T Coli (MPN)		2.2	23			1600
DO (mg/L)			5.0			6.0
EC (umhos/cm)				810		810
TDS (mg/L)						490
NH_3 - N(mg/L)						3.4
O/G (mg/L)	10		15			1.6

Parameter (units)	Effluent Limitation			Monitoring Data – Secondary Level Treatment (From 5/1/00 To 11/1/05)		
	Average Monthly	Average Weekly	Maximum Daily	Highest Average Monthly Discharge	Highest Average Weekly Discharge	Highest Daily Discharge
Acute Toxicity (%)	90		70			45
Cyanide (mg/L)	5.2		10			6.7
Lead (mg/L)	3.7					<5.0
Zinc (mg/L)			101			370
Mercury (ug/L)						0.0368
Lindane (ng/L)			<0.02			0.02

D. Compliance Summary

Effective early 2005, the Discharger upgraded the Facility to provide tertiary level treatment of the municipal wastewater. During this period, the Discharger had difficulty meeting the tertiary level disinfection requirements, and consequently violated the total coliform limits in 2005. However, the cause has since been determined and corrected; as a result, violations have significantly decreased.

E. Planned Changes

1. The Discharger is upgrading the Facility to improve treatment. The improvements will provide oxidized, nitrified, filtered, disinfected, and possibly wetland-polished (nitrate, metals, and organics removals) effluent for an average dry weather flow of 8.5 mgd. This Order conditionally authorizes the increase of the permitted average dry weather flow from 7.0 mgd to 8.5 mgd upon the Discharger demonstrating compliance with Effluent Limitations IV.A. (except for the final limitations for Aluminum), Receiving Water Limitations V.A.; Provisions VI.C.3.b. (Salinity Evaluation and Minimization Plan); and completing Phase III planned improvements. The planned improvements are expected to be completed during the term of this Order, and the Discharger's Report of Waste Discharge describes them as follows:

   Phase 3 Improvement Project (8.5 mgd Design Capacity). Phase 3 improvements should reduce nitrates, and priority pollutants, in the Facility's final effluent discharged to Dredger Cut. The Discharger's proposed improvements include:

   a) Installation of two new influent screens, screenings' washers, and two new influent pumps;
   b) New diffusers in two aeration basins;
   c) Aeration basins' flow modifications to improve de-nitrification
   d) Two additional aeration basins;
   e) An additional clarifier;
   f) A new RAS pump station
   g) An additional anaerobic digester.

Following these upgrades, the Facility will be capable of providing oxidized, denitrified, filtered, and disinfected effluent for up to 8.5 mgd of average dry weather flows. The Discharger is also considering the addition of a treatment wetland, and installation of storage pond aerators and appurtenances. The treatment wetlands and reaeration basin will be within the Discharger's property boundary, just west of the Facility's existing storage ponds. However, a pilot treatment wetland will be constructed to evaluate both the benefits and potential impacts associated with such facilities before the Discharger determines implementation.

2. **Acceptance of Wastewater from Flag City Service Areas.** During the term of this permit, the Discharger plans to accept wastewater flows from the San Joaquin County Flag City Service Areas for treatment and subsequent discharge to Discharge Point 001. Currently, the Flag City Wastewater Treatment Plant is permitted to discharge its treated effluent to Highline Canal under Order No. R5-2003-0061, NPDES No. CA0082848.

III. APPLICABLE PLANS, POLICIES, AND REGULATIONS

The requirements contained in this Order are based on the applicable plans, policies, and regulations identified in section II of the Limitations and Discharge Requirements (Findings). This section provides supplemental information, where appropriate, for the plans, policies, and regulations relevant to the discharge.

A. Legal Authority

See Limitations and Discharge Requirements - Findings, Section II.C.

B. California Environmental Quality Act (CEQA)

See Limitations and Discharge Requirements - Findings, Section II.E.

C. State and Federal Regulations, Policies, and Plans

1. **Water Quality Control Plans**. The Regional Water Board adopted a *Water Quality Control Plan, Fourth Edition (Revised August 2006), for the Sacramento and San Joaquin River Basins* (Basin Plan) that designates beneficial uses, establishes water quality objectives, and contains implementation programs and policies to achieve those objectives for all waters addressed through the plan. In addition, State Water Board Resolution No. 88-63 requires that, with certain exceptions, the Regional Water Board assign the municipal and domestic supply use to water bodies that do not have beneficial uses listed in the Basin Plan.

   The beneficial uses of the Sacramento-San Joaquin Delta, including Dredger Cut, downstream of the discharge are municipal and domestic supply, agricultural irrigation, agricultural stock watering, industrial process water supply, industrial service supply, water contact recreation, other non-contact water recreation, warm freshwater aquatic habitat, cold freshwater aquatic habitat, warm fish migration habitat, cold fish migration habitat, warm spawning habitat, wildlife habitat, and

navigation.

The Basin Plan on page II-1.00 states: "*Protection and enhancement of existing and potential beneficial uses are primary goals of water quality planning…*" and with respect to disposal of wastewaters states that "...*disposal of wastewaters is [not] a prohibited use of waters of the State; it is merely a use which cannot be satisfied to the detriment of beneficial uses.*"

The federal CWA section 101(a)(2), states: "*it is the national goal that wherever attainable, an interim goal of water quality which provides for the protection and propagation of fish, shellfish, and wildlife, and for recreation in and on the water be achieved by July 1, 1983.*" Federal Regulations, developed to implement the requirements of the CWA, create a rebuttable presumption that all waters be designated as fishable and swimmable. CFR Part 131.2 and Part 131.10, require that all waters of the State be regulated to protect the beneficial uses of public water supply, protection and propagation of fish, shell fish and wildlife, recreation in and on the water, agricultural, industrial and other purposes including navigation. CFR Part 131.3(e) defines existing beneficial uses as those uses actually attained after 28 November 1975, whether or not they are included in the water quality standards. CFR Part 131.10 requires that uses be obtained by implementing effluent limitations, requires that all downstream uses be protected and states that in no case shall a state adopt waste transport or waste assimilation as a beneficial use for any waters of the United States.

This Order contains Effluent Limitations requiring a tertiary level of treatment, or equivalent, which is necessary to protect the beneficial uses of Dredger Cut, the receiving water. The Regional Water Board has considered the factors listed in CWC section 13241 in establishing these requirements, as discussed in more detail in Section IV.C.3. of this Fact Sheet.

The Basin Plan on page II-3.00 also states: *"Unless otherwise designated by the Regional Water Board, all ground waters in the Region are considered as suitable or potentially suitable, at a minimum, for municipal and domestic water supply (MUN), agricultural supply (AGR), industrial service supply (IND), and industrial process supply (PRO)."* The Basin Plan further states exceptions to these designations based on State Board Resolution No. 88-63; however, the Discharger did not provide any additional information to determine that the groundwater underlying the Facility, or The Agricultural Fields, meet the specified criteria. Therefore, this Order also contains land discharge specifications, which are also necessary to protect the beneficial uses of the underlying groundwater (receiving water), as discussed in more detail in Section IV.F. of this Fact sheet.

2. **Thermal Plan.** The State Water Board adopted a *Water Quality Control Plan for Control of Temperature in the Coastal and Interstate Water and Enclosed Bays and Estuaries of California* (Thermal Plan) on 18 May 1972, and amended this plan on 18 September 1975. This plan contains temperature objectives for surface waters. The Thermal Plan is applicable to this discharge. For purposes of the Thermal Plan,

the Discharger is considered to be an Existing Discharger of Elevated Temperature Waste. The Thermal Plan in section 5.A., requires the following:

> *"5. Estuaries*
> *A. Existing discharges*
> *(1) Elevated temperature waste discharges shall comply with the following:*
> *a. The maximum temperature shall not exceed the natural receiving water temperature by more than 20°F.*
> *b. Elevated temperature waste discharges either individually or combined with other discharges shall not create a zone, defined by water temperatures of more than 1°F above natural receiving water temperature, which exceeds 25 percent of the cross-sectional area of a main river channel at any point.*
> *c. No discharge shall cause a surface water temperature rise greater than 4°F above the natural temperature of the receiving waters at any time or place.*
> *d. Additional limitations shall be imposed when necessary to assure protection of beneficial uses.*
> *(2) Thermal waste discharges shall comply with the provisions of 5A (1) above and, in addition, the maximum temperature of thermal waste discharges shall not exceed 86°F."*

The Thermal Plan defines *natural receiving water temperature* as "The temperature of the receiving water …unaffected by any elevated temperature waste discharge or irrigation return waters." Typically the Thermal Plan is applied using upstream receiving water conditions. However, (as previously described in Section II.B. of this Fact sheet) since Discharge Point 001 is located at the upstream end (dead-end) of Dredger Cut, there is no upstream flow to determine natural background conditions. Thus, without further information, it is not possible to implement temperature limits based on changes in the receiving water such as those specified in section 5.A.(1) of the Thermal Plan. In situations such as this, where there is no natural receiving water to determine the natural receiving water temperature, the State Water Board recommends the development of a site-specific temperature study to determine the appropriate temperature controls to be placed on the discharge in order to protect the beneficial uses of the receiving water. Based on these recommendations, this Order requires the Discharger to perform a temperature study (see Provisions VI.C.2.b. Temperature Study) to determine the temperature controls necessary to protect the beneficial uses of the receiving water. Based on section 5.A.(2) of the Thermal Plan, this Order contains a maximum temperature effluent limitation of 86ºF.

3. **Antidegradation Policy.** Section 131.12 requires that the state water quality standards include an antidegradation policy consistent with the federal policy. The State Water Board established California's antidegradation policy in State Water Board Resolution No. 68-16. Resolution No. 68-16 incorporates the federal

antidegradation policy where the federal policy applies under federal law. Resolution No. 68-16 requires that existing water quality be maintained unless degradation is justified based on specific findings. The Regional Water Board's Basin Plan implements, and incorporates by reference, both the State and federal antidegradation policies. As discussed in detail in the Fact Sheet (Attachment F, Section IV.D.4.) the discharge is consistent with the antidegradation provisions of 40 CFR section 131.12 and State Water Board Resolution 68-16.

4. **Anti-Backsliding Requirements.** CWA sections 402(o)(2) and 303(d)(4) and CFR Part 122.44(l) prohibit backsliding in NPDES permits. These anti-backsliding provisions require that effluent limitations in a reissued permit must be as stringent as those in the previous permit, with some exceptions in which limitations may be relaxed. Compliance with the Anti-Backsliding requirements is discussed in Section IV.D.3. of this Fact Sheet.

5. ***Emergency Planning and Community Right to Know Act***. CWA Section 13263.6(a), requires that "*the Regional Water Board shall prescribe effluent limitations as part of the waste discharge requirements of a POTW for all substances that the most recent toxic chemical release data reported to the state emergency response commission pursuant to Section 313 of the Emergency Planning and Community Right to Know Act of 1986 (42 U.S.C. Sec. 11023) (EPCRKA) indicate as discharged into the POTW, for which the State Water Board or the Regional Water Board has established numeric water quality objectives, and has determined that the discharge is or may be discharged at a level which will cause, have the reasonable potential to cause, or contribute to, an excursion above any numeric water quality objective*".

   The most recent toxic chemical data report does not indicate any reportable off-site releases or discharges to the collection system for this facility. Therefore, a reasonable potential analysis based on information from Emergency Planning and Community Right to Know Act (EPCRA) cannot be conducted. Based on information from EPCRA, there is no reasonable potential to cause or contribute to an excursion above any numeric water quality objectives included within the Basin Plan or in any State Water Board plan, so no effluent limitations are included in this permit pursuant to CWC section 13263.6(a).

   However, as detailed elsewhere in this Order, available effluent data indicate that there are constituents present in the effluent that have a reasonable potential to cause or contribute to exceedances of water quality standards and require inclusion of effluent limitations based on federal and state laws and regulations.

6. ***Stormwater Requirements*.** USEPA promulgated Federal Regulations for storm water on 16 November 1990 in CFR Parts 122, 123, and 124. The NPDES Industrial Storm Water Program regulates storm water discharges from wastewater treatment facilities. Wastewater treatment plants are applicable industries under the stormwater program and are obligated to comply with the Federal Regulations.

7. ***Endangered Species Act.*** This Order does not authorize any act that results in the taking of a threatened or endangered species or any act that is now prohibited, or becomes prohibited in the future, under either the California Endangered Species Act (Fish and Game Code sections 2050 to 2097) or the Federal Endangered Species Act (16 U.S.C.A. sections 1531 to 1544). This Order requires compliance with effluent limits, receiving water limits, and other requirements to protect the beneficial uses of waters of the state. The Discharger is responsible for meeting all requirements of the applicable Endangered Species Act.

D. Impaired Water Bodies on CWA 303(d) List

1. Under Section 303(d) of the 1972 Clean Water Act, states, territories and authorized tribes are required to develop lists of water quality limited segments. The waters on these lists do not meet water quality standards, even after point sources of pollution have installed the minimum required levels of pollution control technology. On 25 July 2003, USEPA gave final approval to California's 2002 Section 303(d) List of Water Quality Limited Segments. The Basin Plan references this list of Water Quality Limited Segments (WQLSs), which are defined as "…*those sections of lakes, streams, rivers or other fresh water bodies where water quality does not meet (or is not expected to meet) water quality standards even after the application of appropriate limitations for point sources (CFR Part 130, et seq.)*." The Basin Plan also states, "*Additional treatment beyond minimum federal standards will be imposed on dischargers to [WQLSs]. Dischargers will be assigned or allocated a maximum allowable load of critical pollutants so that water quality objectives can be met in the segment.*" The listing for the Sacramento-San Joaquin Delta waterways, including Dredger Cut, includes: diazinon, and chlorpyrifos (Organophosphate pesticides); aldrin, dieldrin, endrin, heptachlor, heptachlor epoxide, chlordane (total), lindane, hexachlorocyclohexane (total), endosulfan (total), and toxaphene (Group A organochlorine pesticides); DDT; mercury; and unknown toxicity.

2. **Total Maximum Daily Loads.** The USEPA requires the Regional Water Board to develop total maximum daily loads (TMDLs) for each 303(d) listed pollutant and water body combination. The USEPA requires the Regional Water Board to develop total maximum daily loads (TMDLs) for each 303(d) listed pollutant and water body combination. The TMDL for organophosphate pesticides (diazinon and chlorpyrifos) was adopted on 23 June 2006, and the TMDL for Group A organochlorine pesticides is scheduled for the year 2011.

   The TMDL for methylmercury was scheduled for December 2006. Regional Water Board staff developed a draft methylmercury TMDL that proposes methylmercury load reductions for facilities discharging to the Sacramento-San Joaquin Delta, including Dredger Cut (*Sacramento-San Joaquin Delta Estuary TMDL for Methylmercury,* Staff Report, June 2006, hereinafter The 2006 Methylmercury Staff Report). Health advisories by the Cal/EPA Office of Environmental Health Hazard Assessment remain in effect for human consumption of fish in the Sacramento-San Joaquin Delta, including Dredger Cut at Lodi, due to excessive concentrations of mercury in fish tissue. Mercury fish tissue monitoring substantiates these health warnings. As described in the Methylmercury 2006 Staff Report, 1048 composite

samples of 4578 fish from 23 species in the Delta were analyzed. For the West Delta resident fish (6 trophic levels from <50 mm through 150-500 mm), the analysis resulted in weighted-average methylmercury concentrations in the composite samples from 0.03 mg/kg to 0.32 mg/kg, which exceeds the USEPA recommended criterion for the protection of human health (0.3 mg/kg in fish tissue). This data confirms there is currently no assimilative capacity for mercury in West Delta and applicable water quality standards must be applied as end-of-pipe effluent limitations. As a result of this study, and health advisories, this Order continues the interim mercury mass-based effluent limitation contained in the previous permit . The 2006 Methylmercury Staff Report was revised in February 2007; however, these revisions do not affect the mass-based loadings within the vicinity of the discharge.

E. Other Plans, Polices and Regulations

1. The State Water Board adopted the *Water Quality Control Policy for the Enclosed Bays and Estuaries of California*. The requirements within this Order are consistent with the Policy.

IV. RATIONALE FOR EFFLUENT LIMITATIONS AND DISCHARGE SPECIFICATIONS

Effluent limitations and toxic and pretreatment effluent standards established pursuant to CWA Sections 301 (Effluent Limitations), 302 (Water Quality Related Effluent Limitations), 304 (Information and Guidelines), and 307 (Toxic and Pretreatment Effluent Standards) and amendments thereto are applicable to the discharge.

The CWA mandates the implementation of effluent limitations that are as stringent as necessary to meet water quality standards established pursuant to state or federal law [33 U.S.C., § 1311(b)(1)(C); CFR, § 122.44(d)(1)]. NPDES permits must incorporate discharge limits necessary to ensure that water quality standards are met. This requirement applies to narrative criteria as well as to criteria specifying maximum amounts of particular pollutants. Pursuant to CFR Part 122.44(d)(1)(i), NPDES permits must contain limits that control all pollutants that "*are or may be discharged at a level which will cause, have the reasonable potential to cause, or contribute to an excursion above any state water quality standard, including state narrative criteria for water quality*." CFR, §122.44(d)(1)(vi), further provide that "[w]*here a state has not established a water quality criterion for a specific chemical pollutant that is present in an effluent at a concentration that causes, has the reasonable potential to cause, or contributes to an excursion above a narrative criterion within an applicable State water quality standard, the permitting authority must establish effluent limits.*"

The CWA requires point source discharges to control the amount of conventional, non-conventional, and toxic pollutants that are discharged into the waters of the United States. The control of pollutants discharged is established through effluent limitations and other requirements in NPDES permits. There are two principal bases for effluent limitations: CFR §122.44(a) requires that permits include applicable technology-based limitations and standards, and CFR §122.44(d) requires that permits include water quality-based effluent limitations to attain and maintain applicable numeric and narrative

water quality criteria to protect the beneficial uses of the receiving water where numeric water quality objectives have not been established.

The Regional Water Board's Basin Plan, page IV-17.00, contains an implementation policy ("Policy for Application of Water Quality Objectives") that specifies that the Regional Water Board "*will, on a case-by-case basis, adopt numerical limitations in orders which will implement the narrative objectives*." This Policy complies with CFR §122.44(d)(1). With respect to narrative objectives, the Regional Water Board must establish effluent limitations using one or more of three specified sources, including (1) USEPA's published water quality criteria, (2) a proposed state criterion (*i.e*., water quality objective) or an explicit state policy interpreting its narrative water quality criteria (*i.e*., the Regional Water Board's "Policy for Application of Water Quality Objectives")(CFR Part 122.44(d)(1) (vi) (A), (B) or (C)), or (3) an indicator parameter. The Basin Plan contains a narrative objective requiring that: "*All waters shall be maintained free of toxic substances in concentrations that produce detrimental physiological responses in human, plant, animal, or aquatic life*" (narrative toxicity objective). The Basin Plan requires the application of the most stringent objective necessary to ensure that surface water and groundwater do not contain chemical constituents, discoloration, toxic substances, radionuclides, or taste and odor producing substances that adversely affect beneficial uses. The Basin Plan states that material and relevant information, including numeric criteria, and recommendations from other agencies and scientific literature will be utilized in evaluating compliance with the narrative toxicity objective. The Basin Plan also limits chemical constituents in concentrations that adversely affect surface water beneficial uses. For waters designated as municipal, the Basin Plan specifies that, at a minimum, waters shall not contain concentrations of constituents that exceed Maximum Contaminant Levels (MCL) of CCR Title 22. The Basin Plan further states that, to protect all beneficial uses, the Regional Water Board may apply limits more stringent than MCLs.

A. Discharge Prohibitions

1. **Prohibition III.A (No discharge or application of waste other than that described in this Order**). This prohibition is based on CWC Section 13260 that requires filing of a report of waste discharge (ROWD) before discharges can occur. The Discharger submitted a ROWD for the discharges described in this Order; therefore, discharges not described in this Order are prohibited.

2. **Prohibition III.B (No controllable condition shall create a nuisance).** This prohibition is based on CWC Section 13050 that requires water quality objectives established for the prevention of nuisance within a specific area. The Basin Plan prohibits conditions that create a nuisance.

3. **Prohibition III.C (No discharge or application of waste classified as 'hazardous' or 'designated').** This prohibition is based on CWC 13173, CCR sections 2510 and 2520, et seq. that requires waste, classified or designated as hazardous, discharged only at Class I waste management units. The Facility is not categorized as a Class I

waste management unit; therefore, discharge of waste classified, or designated, as hazardous is prohibited.

4. **Prohibition III.D (No inclusion of pollutant free wastewater shall cause improper operation of the Facility's systems).** This prohibition is based on CFR Part 122.41 et seq. that requires the proper design and operation of treatment facilities.

5. **Prohibition III.E (No bypasses or overflow of untreated wastewater, except under the conditions at CFR Part 122.41(m)(4)).** This prohibition is based on CFR Part 122.41. As stated in section I.G of Attachment D, Standard Provisions, this Order prohibits bypass from any portion of the treatment facility. CFR Part 122.41 (m), define "bypass" as the intentional diversion of waste streams from any portion of a treatment facility. This section of CFR Part 122.41 (m)(4) prohibits bypass unless it is unavoidable to prevent loss of life, personal injury, or severe property damage. In considering the Regional Water Board's prohibition of bypasses, the State Water Board adopted a precedential decision, Order No. WQO 2002-0015, which cites CFR Part 122.41(m) as allowing bypass only for essential maintenance to assure efficient operation. In the case of United States v. City of Toledo, Ohio (63 F. Supp 2d 834, N.D. Ohio 1999) the Federal Court ruled that *"any bypass which occurs because of inadequate plant capacity is unauthorized…to the extent that there are 'feasible alternatives', including the construction or installation of additional treatment capacity".*

B. Technology-Based Effluent Limitations

1. Scope and Authority

Regulations promulgated in section 125.3(a)(1) require technology-based effluent limitations for municipal Dischargers to be placed in NPDES permits based on Secondary Treatment Standards or Equivalent to Secondary Treatment Standards.

The Federal Water Pollution Control Act Amendments of 1972 (PL 92-500) established the minimum performance requirements for POTWs [defined in section 304(d)(1)]. Section 301(b)(1)(B) of that Act requires that such treatment works must, at a minimum, meet effluent limitations based on secondary treatment as defined by the USEPA Administrator.

Based on this statutory requirement, USEPA developed secondary treatment regulations, which are specified in Part 133. These technology-based regulations apply to all municipal wastewater treatment plants and identify the minimum level of effluent quality attainable by secondary treatment in terms of biochemical oxygen demand (BOD_5) and total suspended solids (TSS).

2. **Applicable Technology-Based Effluent Limitations**

a. **BOD_5 and TSS.** CFR, Part 133, establish the minimum weekly and monthly average level of effluent quality attainable by secondary treatment for BOD_5 and TSS. Tertiary treatment is necessary to protect the beneficial uses of the receiving stream and the final effluent limitations for BOD_5 and TSS are based on the technical capability of the tertiary process. BOD_5 is a measure of the amount of oxygen used in the biochemical oxidation of organic matter. The secondary and tertiary treatment standards for BOD_5 and TSS are indicators of the effectiveness of the treatment processes. The principal design parameter for wastewater treatment plants is the daily BOD_5 and TSS loading rates and the corresponding removal rate of the system. In applying CFR Part 133 for weekly and monthly average BOD_5 and TSS limitations, the application of tertiary treatment processes results in the ability to achieve lower levels for BOD_5 and TSS than the secondary standards currently prescribed; the 30-day average BOD_5 and TSS limitations have been revised to 10 mg/L, which is technically based on the capability of a tertiary system. In addition to the average weekly and average monthly effluent limitations, a daily maximum effluent limitation for BOD_5 and TSS is included in the Order to ensure that the treatment works are not organically overloaded and operate in accordance with design capabilities. In addition, CFR Part 133.102, in describing the minimum level of effluent quality attainable by secondary treatment, states that the 30-day average percent removal shall not be less than 85 percent. If 85 percent removal of BOD_5 and TSS must be achieved by a secondary treatment plant, it must also be achieved by a tertiary (i.e., treatment beyond secondary level) treatment plant. This Order contains a limitation requiring an average of 85 percent removal of BOD_5 and TSS over each calendar month.

b. **pH.** CFR, Part 133, also establishes the effluent values for pH that a POTW must maintain. CFR, Part 133.102 specifies that the effluent values for pH shall be maintained, at a minimum, within the limits of 6.0 to 9.0.

c. The final technology-based effluent limitations required by this Order are summarized below in Table F-3.

Summary of Technology-based Effluent Limitations
Discharge Point 001

Table F-3. Summary of Technology-based Effluent Limitations

Parameter	Units	Effluent Limitations				
		Average Monthly	Average Weekly	Maximum Daily	Instantaneous Minimum	Instantaneous Maximum
BOD 5-day @ 20°C	mg/L	10	15	20		
Total Suspended Solids	mg/L	10	15	20		
pH	Standard Units				6.0	9.0
85% Removal of BOD 5-day @ 20ºC and Total Suspended Solids						

C. Water Quality-Based Effluent Limitations (WQBELs)

1. Scope and Authority

As specified in CFR Part 122.44(d)(1)(i), permits are required to include WQBELs for pollutants (including toxicity) that are or may be discharged at levels that cause, have reasonable potential to cause, or contribute to an in-stream excursion above any state water quality standard. The process for determining reasonable potential and calculating WQBELs when necessary is intended to protect the designated uses of the receiving water as specified in the Basin Plan, and achieve applicable water quality objectives and criteria that are contained in other state plans and policies, or any applicable water quality criteria contained in the CTR and NTR.

2. Applicable Beneficial Uses and Water Quality Criteria and Objectives

a. **Receiving Water.** Dredger Cut is a tidally influenced dead end slough that is seasonally fed by storm water and agricultural runoff from the surrounding area. Dredger Cut flows to the confluence of Bishop Cut and White Slough, which are tributaries to the Sacramento-San Joaquin Delta. The Beneficial uses of the Sacramento-San Joaquin Delta were previously described in Section III.C.1 of this Fact Sheet.

b. **Hardness.** While no effluent limitation for hardness is necessary in this Order, hardness is critical to the assessment of the need for, and the development of, effluent limitations for certain metals. The *California Toxics Rule* and the *National Toxics Rule* contain water quality criteria for seven metals that vary as a function of hardness, the lower the hardness the lower the water quality criteria. The hardness-dependent metals include cadmium, copper, chromium III, lead, nickel, silver, and zinc. The equation describing the total recoverable regulatory criterion is as follows:

$$\text{Total Recoverable Criterion} = e^{m[\ln(H)]+b} \qquad \text{(Equation 1)}$$

Where:

m = criterion-specific constant

H = Hardness

b = criterion-specific constant

The constants “m” and “b” are specific to both the metal under consideration, and the type of total recoverable criterion (i.e. acute or chronic).

Effluent limitations for the discharge must be set to protect the beneficial uses of the receiving water for all discharge conditions. In the absence of the option of including condition-dependent, “floating” effluent limitations that are reflective of actual conditions at the time of discharge, effluent limitations must be set using a reasonable worst-case condition in order to protect beneficial uses for all

discharge conditions. Recent studies indicate that using the receiving water lowest hardness for establishing water quality criteria is not the most protective for the receiving water. The Regional Water Board has evaluated these studies and concurs that for some parameters the beneficial uses of the receiving water are best protected using the lowest hardness value of the effluent, while for some parameters, the use of both the highest hardness value of the receiving water and the lowest hardness value of the effluent is the most protective.

Because of the non-linearity of the Total Recoverable Criterion equation, the relationship can be either concave downward or concave upward depending on the criterion-specific constants. For those contaminants whereby the regulatory criteria exhibit a concave downward relationship as a function of hardness (e.g. acute and chronic copper, chromium III, nickel, and zinc, and chronic cadmium), use of the lowest recorded effluent hardness for establishment of water quality objectives is fully protective of all beneficial uses regardless of whether the effluent or receiving water hardness is higher.

For those metals where the regulatory criteria exhibit a concave upward relationship as a function of hardness (i.e. acute cadmium, acute and chronic lead, and acute silver) a water quality objective based on either the effluent hardness or the receiving water hardness would not be protective under all mixing scenarios. Rather, a water quality objective that accounts for both the hardness of the receiving water and the effluent is required. The following equations provide fully protective water quality criteria for these metals that exhibit a concave upward relationship.

$$\text{Total Recoverable Criterion} = \left(\frac{m\left(H_e - H_{rw}\right)\left(e^{m\{\ln(H_{rw})\}+b}\right)}{H_{rw}} \right) + e^{m\{\ln(H_{rw})\}+b} \quad \text{(Equation 2)}$$

Where:

H_e = Lowest recorded effluent hardness

H_{rw} = Highest recorded receiving water hardness (Note: using the highest recorded receiving water hardness increases the difference between the hardness of the two waters and leads to the development of more restrictive water quality criteria)

m = criterion-specific constant

b = criterion-specific constant.

Effluent limitations for the discharge must be set to protect the beneficial uses of the receiving water for all discharge conditions. For purposes of establishing water quality criteria for hardness-dependent metal criteria with a concave downward relationship (i.e. acute and chronic copper, chromium III, nickel, and zinc, and chronic cadmium), Equation 1, above, was used with a lowest reported effluent hardness value of 91 mg/L as $CaCO_3$. For establishing water quality criteria for hardness-dependent metal criteria with a concave upward relationship

(i.e. acute cadmium, acute and chronic lead, and acute silver), Equation 2, above, was used with the lowest reported effluent hardness and a maximum receiving water hardness of 153 mg/L as $CaCO_3$.

c. **Assimilative Capacity/Mixing Zone.** Dredger Cut is a tidally influenced dead end slough with minimal dilution within the vicinity of the discharge. In 1998, the Discharger submitted results of a model that indicated the average dilution is 2:1 over a tidal cycle at a location approximately 300 meters downstream of the discharge (*Water Quality Impact Report, White Slough Water Pollution Control Facility,* Litton, Gary, and Nikaido, Jason). The USEPA allows states to have broad flexibility in designing its mixing zone policies, and provides guidelines and procedures in its Technical Support Document for Water Quality-Based Toxics Control. Based on this document and the Basin Plan, the Regional Water Board determined that the available dilution within the vicinity of the discharge is negligible and found that a mixing zone should not be considered. As a result, the Regional Water Board, in Order No. 5-00-031, did not designate any mixing zone within which water quality objectives will not apply.

This Order also does not allow a mixing zone, nor apply dilution credits, because the Discharger did not provide any additional information to determine a mixing zone that will not adversely impact beneficial uses. Furthermore, the Regional Water Board finds that dilution credits are not appropriate because the receiving water is a quiescent estuary with negligible dilution within the vicinity of the discharge. However, should the Discharger provide an adequate dilution and mixing zone study then this Order may be reopened to allow dilution credits.

3. **Determining the Need for WQBELs**

a. CWA section 301 (b)(1) requires NPDES permits to include effluent limitations that achieve technology-based standards and any more stringent limitations necessary to meet water quality standards. Water quality standards include Regional Water Board Basin Plan beneficial uses and narrative and numeric water quality objectives, State Water Board-adopted standards, and Federal standards, including the CTR and NTR. The Basin Plan includes numeric site-specific water quality objectives and narrative objectives for toxicity, chemical constituents, and tastes and odors. The narrative toxicity objective states: "*All waters shall be maintained free of toxic substances in concentrations that produce detrimental physiological responses in human, plant, animal, or aquatic life.*" (Basin Plan at III-8.00.) With regards to the narrative chemical constituents objective, the Basin Plan states that waters shall not contain chemical constituents in concentrations that adversely affect beneficial uses. At minimum, "…*water designated for use as domestic or municipal supply (MUN) shall not contain concentrations of chemical constituents in excess of the maximum contaminant levels (MCLs)*" in Title 22 of CCR. The narrative tastes and odors objective states: "*Water shall not contain taste- or odor-producing substances in concentrations that impart undesirable tastes or odors to domestic or municipal water supplies or to fish flesh or other edible products of aquatic origin, or that cause nuisance, or otherwise adversely affect beneficial uses.*"

b. Federal regulations require effluent limitations for all pollutants that are or may be discharged at a level that will cause or have the reasonable potential to cause, or contribute to an in-stream excursion above a narrative or numerical water quality standard. Based on information submitted as part of the application, in studies, and as directed by monitoring and reporting programs, the Regional Water Board finds that the discharge has a reasonable potential to cause or contribute to an in-stream excursion above a water quality standard for aluminum, ammonia, manganese, nitrate, nitrite, pH, temperature, turbidity, total coliform, dichlorobromomethane, and chlorodibromomethane. Water quality-based effluent limitations (WQBELs) for these constituents are included in this Order. A summary of the reasonable potential analysis (RPA) is provided in Table F-5, and a detailed discussion of the RPA is provided below.

c. The Regional Water Board conducted the RPA in accordance with Section 1.3 of the SIP. Although the SIP applies directly to the control of CTR priority pollutants, the State Water Board has held that the Regional Water Board may use the SIP as guidance for water quality-based toxics control.[1] The SIP states in the introduction "*The goal of this Policy is to establish a standardized approach for permitting discharges of toxic pollutants to non-ocean surface waters in a manner that promotes statewide consistency."* Therefore, in this Order the RPA procedures from the SIP were used to evaluate reasonable potential for both CTR and non-CTR constituents. The RPA was conducted using effluent data collected after construction of the tertiary filtration and UV Disinfection facilities. This data represents the current discharge.

d. WQBELs were calculated in accordance with section 1.4 of the SIP, as described in Section IV.C.4. of this Fact Sheet.

e. **Aluminum.** USEPA developed National Recommended Ambient Water Quality Criteria for protection of freshwater aquatic life for aluminum. The recommended four-day average (chronic) and one-hour average (acute) criteria for aluminum are 87 ug/L and 750 ug/L, respectively, for waters with a pH of 6.5 to 9.0. USEPA recommends that the ambient criteria are protective of the aquatic beneficial uses of receiving waters in lieu of site-specific criteria. The receiving stream has been measured to have a low hardness—typically between 42 and 153 mg/L as $CaCO_3$. This condition is supportive of the applicability of the ambient water quality criteria for aluminum, according to USEPA's development document.

   The MEC for aluminum was 200 ug/L, based on 10 samples collected between 2 February 2005, and 14 June 2006, while the maximum observed ambient receiving water aluminum concentration was 680 ug/L, based on 12 samples collected between 13 November 2001, and 16 October 2002. Therefore, aluminum in the discharge has a reasonable potential to cause or contribute to an in-stream excursion above a level necessary to protect aquatic life resulting in a violation of the Basin Plan's narrative toxicity objective. Since the receiving

[1] See, Order WQO 2001-16 (Napa) and Order WQO 2004-0013 (Yuba City)

water exceeds the acute and chronic toxicity criteria, no assimilative capacity for aluminum is available and a dilution credit cannot be allowed. This Order contains final Average Monthly Effluent Limitations (AMEL) and Maximum Daily Effluent Limitations (MDEL) for aluminum of 66 ug/L and 155 ug/L, respectively, based on USEPA's National Ambient Water Quality Criteria for the protection of freshwater aquatic life (See Table F-6 in this Fact Sheet for WQBEL calculations).

In USEPA's *Ambient Water Quality Criteria for Aluminum—1988* [EPA 440/5-86-008], USEPA states that "[a]*cid-soluble aluminum…is probably the best measurement at the present…*"; however, USEPA has not yet approved an acid-soluble test method for aluminum. Replacing the ICP/AES portion of the analytical procedure with ICP/MS would allow lower detection limits to be achieved. Based on USEPA's discussion of aluminum analytical methods, this Order allows the use of the alternate aluminum testing protocol described above to meet monitoring requirements.

Based on the sample results in the effluent, it appears that the Discharger may be in immediate non-compliance upon issuance of the permit. New or modified control measures may be necessary in order to comply with the effluent limitations, and the new or modified control measures cannot be designed, installed and put into operation within 30 calendar days. The Basin Plan includes a provision that authorizes the use of compliance schedules in NPDES permits for water quality objectives adopted after September 25, 1995 (See Basin Plan at page IV-16). The water quality-based effluent limitations for aluminum are based on a new interpretation of the narrative standard for protection of receiving water beneficial uses. Therefore, a compliance schedule for compliance with the aluminum effluent limitations is established in the Order.

An interim performance-based maximum daily effluent limitation of 224 μg/L has been established in this Order. The interim limitation was determined as described in Section IV.E.1. of this Fact Sheet. The interim limitation **is in effect until 18 May 2010**. As part of the compliance schedule, this Order requires the Discharger to submit a corrective action plan and implementation schedule to assure compliance with the final aluminum effluent limitations. In addition, the Discharger shall submit an engineering treatment feasibility study and prepare and implement a pollution prevention plan that is in compliance with CWC section 13263.3(d)(3).

f. **Ammonia.** Untreated municipal wastewater contains ammonia. Nitrification is a biological process that converts ammonia to nitrite and nitrite to nitrate. Denitrification is a process that converts nitrate to nitrite or nitric oxide and then to nitrous oxide or nitrogen gas, which is then released to the atmosphere. The Discharger partially nitrifies to remove ammonia from the waste stream. Inadequate or incomplete nitrification may result in the discharge of ammonia to the receiving stream. Ammonia is known to cause toxicity to aquatic organisms in surface waters. Discharges of ammonia would violate the Basin Plan narrative toxicity objective. Applying CFR Part 122.44(d)(1)(vi)(B), it is appropriate to use

USEPA's Ambient National Water Quality Criteria for the Protection of Freshwater Aquatic Life for ammonia, which was developed to be protective of aquatic organisms.

USEPA's *Ambient Water Quality Criteria for the Protection of Freshwater Aquatic Life*, for total ammonia, recommends acute (1-hour average; criteria maximum concentration) standards based on pH and chronic (30-day average, criteria continuous concentration) standards based on pH and temperature. It also recommends a maximum four-day average concentration of 2.5 times the criteria continuous concentration. USEPA found that as pH increased, both the acute and chronic toxicity of ammonia increased. Salmonids were more sensitive to acute toxicity effects than other species. However, while the acute toxicity of ammonia was not influenced by temperature, it was found that invertebrates and young fish experienced increasing chronic toxicity effects with increasing temperature. Because Dredger Cut, a tributary to White Slough and thus Sacramento-San Joaquin Delta, has a beneficial use of cold freshwater habitat and because the presence of salmonids and early fish life stages in White Slough is well-documented, the recommended criteria for waters where salmonids and early life stages are present were used. USEPA's recommended criteria are shown below:

$$CCC_{30-day} = \left(\frac{0.0577}{1+10^{7.688-pH}} + \frac{2.487}{1+10^{pH-7.688}} \right) \times MIN\left(2.85, 1.45 \cdot 10^{0.028(25-T)}\right), \text{ and}$$

$$CMC = \left(\frac{0.275}{1+10^{7.204-pH}} + \frac{39.0}{1+10^{pH-7.204}} \right),$$

where *T* is in degrees Celsius

The acute and chronic ammonia toxicity criteria were calculated using eleven years (1996 – 2006) of receiving water pH and temperature data collected twice per week at monitoring location R-1. During the eleven year period, the receiving water pH ranged from 6.0 standard units (s.u.) to 8.2 s.u., and the temperature ranged from 9.0 degrees Celsius (°C) to 31 °C, indicating a distinct seasonal variation. It is appropriate to use all eleven years of electronically available data as it provides a higher degree of confidence.

i. **Acute Criteria.** An acute criterion was calculated for each receiving water pH value using the CMC equation based on salmonids present. A total of 563 acute criteria were calculated, and the 1/10th percentile was determined as the CMC at 4.3 mg/L. The 1/10th percentile is consistent with the 1-in-3 year average frequency for criteria excursions recommended by the USEPA.

ii. **Chronic Criteria.** The chronic criteria were calculated using the CCC equation based on early life stages present. USEPA recommends that "if samples are obtained from a receiving water over a period of time during which pH and/or temperature is not constant, the pH, temperature, and the concentration of total ammonia in each sample should be determined." (p.85,

1999 Update of Ambient Water Quality Criteria for Ammonia, December 1999, EPA/822/R-99-014). A total of 563 chronic criteria were calculated using each sample pH and temperature pair in the CCC equation. The 1/10th percentile was determined as the 30-day average CCC at 1.4 mg/L. The 4-day average CCC is 3.5 mg/L, which was calculated at 2.5 times the 30-day average CCC.

In order to develop the effluent limitations using the procedures in the TSD, the coefficient of variation must be calculated. Five years of effluent monitoring data (2002 – 2006) were used to estimate the CV in order to increase the statistical power of the method of calculation. Based on 535 samples, the average concentration of ammonia is 1.01 mg/L, and the standard deviation is 2.9. The resulting effluent limitations are 1.3 mg/L (as N) for the average monthly effluent limitation and 4.3 mg/L (as N) for the maximum daily effluent limitation. Table F-7 presents the various factors and coefficients used to calculate the effluent limitations.

Based on the sample results in the effluent, it appears that the Discharger may be in immediate non-compliance upon issuance of the permit. New or modified control measures may be necessary in order to comply with the effluent limitations, and the new or modified control measures cannot be designed, installed and put into operation within 30 calendar days. The Basin Plan includes a provision that authorizes the use of compliance schedules in NPDES permits for water quality objectives adopted after 25 September 1995 (See Basin Plan at page IV-16). The water quality-based effluent limitations for ammonia are based on a new interpretation of the narrative standard for protection of receiving water beneficial uses. Therefore, a compliance schedule for compliance with the ammonia effluent limitations is established in the Order.

An interim performance-based maximum daily effluent limitation of 25 mg/L has been established in this Order. The interim limitation is based on the MEC of 25 mg/L, which occurred on 15 September 2006, and **is in effect until 18 May 2010.** As part of the compliance schedule, this Order requires the Discharger to submit a corrective action plan and implementation schedule to assure compliance with the final ammonia effluent limitations. In addition, the Discharger shall submit an engineering treatment feasibility study and prepare and implement a pollution prevention plan that is in compliance with CWC section 13263.3(d)(3).

g. **Bis (2-ethylhexyl) phthalate.** Bis (2-ethyl-hexyl) phthalate is used primarily as one of several plasticizers in polyvinyl chloride (PVC) resins for fabricating flexible vinyl products. According to the Consumer Product Safety Commission, USEPA, and the Food and Drug Administration, these PVC resins are used to manufacture many products, including soft squeeze toys, balls, raincoats, adhesives, polymeric coatings, components of paper and paperboard, defoaming agents, animal glue, surface lubricants, and other products that must stay flexible and noninjurious for the lifetime of their use. The State MCL for bis (2-ethylhexyl)

phthalate is 4 ug/l and the USEPA MCL is 6 ug/l. The NTR criterion for Human health protection for consumption of water and aquatic organisms is 1.8 ug/l and for consumption of aquatic organisms only is 5.9 ug/l.

The Discharger obtained fourteen samples from February 2005 through August 2006. Only one sample, collected on 7 September 2005, indicated a bis (2-ethyl-hexyl) phthalate concentration of 11 ug/L. Because previous samples (collected on 5 February 2005, and 13 April 2005) were non-detects based on a Minimum Detection Limit of 1.7 ug/L, and the fact that the handling and storing of bis (2-ethyl-hexyl) phthalate samples are known to be easily contaminated, the Discharger, suspicious of this analytical result, immediately accelerated monitoring at lower detection limits. All subsequent analytical results (nine samples collected from November 2005 to August 2006) were non-detects, based on a lower Method Detection Limit of 0.6 ug/L. Based on this information, and as authorized by the SIP (Section 1.2), the Regional Water Board determined that the analytical results of the sample collected on 7 September 2005, was not representative, and therefore, the discharge does not have a reasonable potential to cause or contribute to an in-stream excursion above the NTR criterion for bis (2-ethylhexyl) phthalate. Thus, this Order does not contain effluent limitations for bis (2-ethylhexyl) phthalate.

h. **Chlorine Residual.** The previous permit contained effluent limitations for chlorine. However, the Discharger has since upgraded the Facility, and now uses UV Disinfection instead of disinfection by chlorination. Therefore, this Order does not contain chlorine effluent limitations. However, this Order requires the Discharger to monitor for total chlorine residual should chlorine be used at the Facility (e.g. Maintenance activities). This removal of the chlorine residual effluent limitation is consistent with the anti-backsliding requirements of the CWA and Federal regulations.

i. **Cyanide.** The CTR includes maximum 1-hour average and 4-day average cyanide concentrations of 22 ug/L and 5.2 ug/L, respectively, for the protection of freshwater aquatic life. No cyanide was detected (ML 5 ug/L) in 16 effluent samples collected between 2 February 2005, and 15 May 2006; nor was cyanide detected in ambient receiving water samples collected between 13 November 2001, and 16 October 2002. Therefore, the discharge does not demonstrate a reasonable potential to cause or contribute to an in-stream excursion above the CTR criteria for cyanide. The previous permit contained effluent limitations for cyanide; however, based on these samples and reasonable potential analysis, this Order does not contain cyanide effluent limitations. This removal of the cyanide effluent limitation is consistent with the anti-backsliding requirements of the CWA and Federal regulations.

j. **Chlorodibromomethane.** The CTR includes a chlorodibromomethane criterion of 0.41 ug/L for the protection of human health and is based on a one-in-a-million cancer risk for waters from which both water and organisms are consumed. The MEC for chlorodibromomethane was 1.1 ug/L, based on 14 samples collected

between 2 February 2005, and 14 June 2006, while the maximum observed ambient receiving water chlorodibromomethane concentration was <0.5 ug/L, based on 12 samples collected between 13 November 2001, and 16 October 2002. Therefore, the discharge has a reasonable potential to cause or contribute to an in-stream excursion above the CTR criterion for chlorodibromomethane.

No dilution is allowed due to periods of no flow in the receiving water. An AMEL and MDEL for chlorodibromomethane of 0.41 ug/L and 0.82 ug/L, respectively, are included in this Order based on the CTR criterion for the protection of human health (See Table F-9 in this Fact Sheet for WQBEL calculations). The Discharger is unable to comply with these limitations. Section 2.1 of the SIP allows for compliance schedules within the permit for existing discharges where it is demonstrated that it is infeasible for a Discharger to achieve immediate compliance with a CTR criterion. Using the statistical methods for calculating interim effluent limitations described in Section IV.E.1. of this Fact Sheet, an interim performance-based maximum daily limitation of 3.4 ug/L was calculated.

Section 2.1 of the SIP provides that: "*Based on an existing discharger's request and demonstration that it is infeasible for the discharger to achieve immediate compliance with a CTR criterion, or with an effluent limitation based on a CTR criterion, the RWQCB may establish a compliance schedule in an NPDES permit.*" Section 2.1, further states that compliance schedules may be included in NPDES permits provided that the following justification has been submitted: …"*(a) documentation that diligent efforts have been made to quantify pollutant levels in the discharge and the sources of the pollutant in the waste stream; (b) documentation of source control measures and/or pollution minimization measures efforts currently underway or completed; (c) a proposal for additional or future source control measures, pollutant minimization actions, or waste treatment (i.e., facility upgrades); and (d) a demonstration that the proposed schedule is as short as practicable*." The Discharger provided this information on 1 February 2007. The new water quality-based effluent limitations for chlorodibromomethane become effective on **18 May 2010**.

This Order requires the Discharger to submit a corrective action plan and implementation schedule to assure compliance with the final chlorodibromomethane effluent limitations. The interim effluent limitations are in effect through **17 May 2010**. As part of the compliance schedule, the Discharger shall develop and implement a pollution prevention program in compliance with CWC section 13263.3(d)(3) and submit an engineering treatment feasibility study.

k. **Dichlorobromomethane***.* The CTR includes a dichlorobromomethane criterion of 0.56 ug/L for the protection of human health and is based on a one-in-a-million cancer risk for waters from which both water and organisms are consumed. The MEC for dichlorobromomethane was 1.2 ug/L, based on 14 samples collected between 2 February 2005, and 14 June 2006, while the maximum observed ambient receiving water dichlorobromomethane concentration was <0.5 ug/L,

based on 12 samples collected between 13 November 2001, and 16 October 2002. Therefore, the discharge has a reasonable potential to cause or contribute to an in-stream excursion above the CTR criterion for dichlorobromomethane.

No dilution is allowed due to periods of no flow in the receiving water. An AMEL and MDEL for dichlorobromomethane of 0.56 ug/L and 1.1 ug/L, respectively, are included in this Order based on the CTR criterion for the protection of human health (See Table F-8 in this Fact Sheet for WQBEL calculations). The Discharger is unable to comply with these limitations. Section 2.1 of the SIP allows for compliance schedules within the permit for existing discharges where it is demonstrated that it is infeasible for a Discharger to achieve immediate compliance with a CTR criterion. Using the statistical methods for calculating interim effluent limitations described in Section IV.E.1. of this Fact Sheet, an interim performance-based maximum daily limitation of 3.7 ug/L was calculated.

Section 2.1 of the SIP provides that: "*Based on an existing discharger's request and demonstration that it is infeasible for the discharger to achieve immediate compliance with a CTR criterion, or with an effluent limitation based on a CTR criterion, the RWQCB may establish a compliance schedule in an NPDES permit.*" Section 2.1, further states that compliance schedules may be included in NPDES permits provided that the following justification has been submitted: …"*(a) documentation that diligent efforts have been made to quantify pollutant levels in the discharge and the sources of the pollutant in the waste stream; (b) documentation of source control measures and/or pollution minimization measures efforts currently underway or completed; (c) a proposal for additional or future source control measures, pollutant minimization actions, or waste treatment (i.e., facility upgrades); and (d) a demonstration that the proposed schedule is as short as practicable*." The Discharger provided this information on 1 February 2007. The new water quality-based effluent limitations for dichlorobromomethane become effective on **18 May 2010**.

This Order requires the Discharger to submit a corrective action plan and implementation schedule to assure compliance with the final dichlorobromomethane effluent limitations. The interim effluent limitations are in effect through **17 May 2010**. As part of the compliance schedule for dichlorobromomethane, the Discharger shall develop and implement a pollution prevention program in compliance with CWC section 13263.3(d)(3) and submit an engineering treatment feasibility study.

l. **Electrical Conductivity. (see Subsection bb. Salinity)**

m. **Lead**. The CTR includes hardness-dependent standards for the protection of freshwater aquatic life for lead. The standards for metals are presented in dissolved concentrations. USEPA recommends conversion factors to translate dissolved concentrations to total concentrations. The lead water quality objective most protective under all mixing scenarios should account for both the hardness of the receiving water and the effluent. Thus the conversion factor for lead in freshwater that provides fully protective water quality criteria is

$$\left(\frac{1.273\left(H_e - H_{rw}\right)\left(e^{1.273\{\ln(H_{rw})\}+b}\right)}{H_{rw}}\right) + e^{1.273\{\ln(H_{rw})\}+b}$$, where b = -1.46 for acute, or –4.705 for chronic. Using the worst-case measured hardness from the effluent (91 mg/L) and from the highest recorded receiving water hardness (153 mg/L), the applicable chronic criterion (maximum four-day average concentration) is 0.83 ug/L and the applicable acute criterion (maximum one-hour average concentration) is 67.93 ug/L, as total recoverable.

No lead was detected (MDL 2 ug/L) in 16 effluent samples collected between 2 February 2005, and 15 May 2006; nor was lead detected (MDL 0.5 ug/L) in ambient receiving water samples collected between 13 November 2001, and 16 October 2002. The previous permit contained effluent limitations for lead; however, because lead was not detected in these samples, this Order does not contain lead effluent limitations. This removal of the lead effluent limitation is consistent with the anti-backsliding requirements of the CWA and Federal regulations.

n. **Manganese.** The Secondary MCL - Consumer Acceptance Limit for manganese is 50 ug/L. The MEC for manganese was 38.3 ug/L, based on 6 samples collected between 2 February 2005, and 14 June 2006, while the maximum observed ambient receiving water manganese concentration was 66 ug/L, based on 12 samples collected between 13 November 2001, and 16 October 2002. The receiving water has exceeded the Secondary MCL for manganese, and therefore, no assimilative capacity is available in the receiving water for manganese. Thus, the discharge has a reasonable potential to cause or contribute to an in-stream excursion above the Secondary MCL for manganese. This Order contains Maximum Daily Effluent Limitations (MDEL) for manganese of 50 ug/L based on protection of the Basin Plan's site-specific specific objective for the Sacramento-San Joaquin Delts.

Based on the sample results in the effluent, it appears that the Discharger may be in immediate non-compliance upon issuance of the permit. New or modified control measures may be necessary in order to comply with the effluent limitations, and the new or modified control measures cannot be designed, installed and put into operation within 30 calendar days. Furthermore, the effluent limitation for manganese is a new regulatory requirement within this permit, which becomes applicable to the waste discharge with the adoption of this Order, which was adopted after July 2000. Therefore, a compliance time schedule for compliance with the manganese effluent limitation is established in TSO No. R5-2007-0114 in accordance with CWC section 13300, that requires preparation and implementation of a pollution prevention plan in compliance with CWC section 13262.2.

o. **Mercury.** The current USEPA Ambient Water Quality Criteria for Protection of Freshwater Aquatic Life, continuous concentration, for mercury is 0.77 ug/L (30-day average, chronic criteria). The CTR contains a human health criterion (based on a one-in-a-million cancer risk) of 0.050 ug/L for waters from which both

water and aquatic organisms are consumed. Both values are controversial and subject to change. In CFR Part 131, USEPA acknowledges that the human health criteria may not be protective of some aquatic or endangered species and that "…*more stringent mercury limits may be determined and implemented through use of the State's narrative criterion.*" In the CTR, USEPA reserved the mercury criteria for freshwater and aquatic life and may adopt new criteria at a later date. The maximum observed effluent mercury concentration in the effluent discharge was 0.0072 ug/L.

The Sacramento-San Joaquin Delta, which includes Dredger Cut, has been listed as an impaired water body pursuant to CWA Section 303(d) because of mercury. Mercury bioaccumulates in fish tissue and, therefore, discharge of mercury to the receiving water is likely to contribute to exceedances of the narrative toxicity objective and impacts on beneficial uses. Advisories by the Cal/EPA Office of Environmental Health Hazard Assessment remain in effect for human consumption of fish in the Delta due to excessive concentrations of mercury in fish tissue.

During the period 1998-2000, 9 fish tissue monitoring samples of legally catchable largemouth bass were collected from White Slough near Dredger Cut. Their fish tissue concentrations averaged 0.32 mg/kg, which exceed the USEPA recommended criterion for the protection of human health 0.3 mg/kg in fish tissue; thus, demonstrating a lack of assimilative capacity for mercury in White Slough. Since mercury is contained in the discharge, and because the Delta is already listed as being impaired by mercury, there is reasonable potential for the discharge to cause, or contribute to an in-stream excursion of the Basin Plan's narrative toxicity objective, based on the USEPA's recommended fish tissue criterion for the protection of human health. Based on this information, this Order continues the interim mercury performance-based mass effluent limitation of 0.113 pounds per month from the previous permit for the effluent discharge to Dredger Cut. This limit shall remain in effect until a total maximum daily load (TMDL) can be established and USEPA develops mercury standards that are protective of human health. If USEPA develops new water quality standards for mercury, or if the Regional Water Board establishes final effluent limitations after adoption of the final mercury Delta TMDL, this permit may be reopened and the Effluent Limitations adjusted.

p. **Molybdenum.** *Water Quality for Agriculture,* Food and Agriculture Organization of the United Nations—Irrigation and Drainage Paper No. 29, Rev. 1 (R.S. Ayers and D.W. Westcot, Rome, 1985), recommends that the molybdenum concentration in waters used for agricultural irrigation not exceed 10 ug/L. Applying the Basin Plan "Policy for Application of Water Quality Objectives", the numeric standard that implements the narrative objective is the Agricultural Water Quality Goal of 10 ug/L.

The MEC for molybdenum was 7.2 ug/L, based on 6 samples collected between 2 February 2005, and 26 April 2006; the five other samples were non-detects at a minimum detection level of 5 ug/L. No analytical results were obtained to

determine concentrations of molybdenum in the ambient receiving water samples. The discharge does not demonstrate a reasonable potential to cause or contribute to an in-stream excursion above the Basin Plan's chemical constituents objective, and therefore, this Order does not contain effluent limitations for molybdenum. Molybdenum is used as an alloying agent in stainless steels, tool steels, cast irons, and high temperature superalloys. The Discharger accepts wastewater from two metal finishers, which are Significant Industrial Users in its pretreatment program. Because molybdenum was detected in the effluent once out of the six monitoring samples obtained during the period 2 February 2005, and 26 April 2006, and because the metal finishers are potential sources of molybdenum, this Order requires the Discharger to continue monitoring for molybdenum to determine whether a reasonable potential to cause or contribute to an in-stream excursion above the Basin Plan objectives exists.

q. **Nitrite and Nitrate.** Untreated municipal wastewater contains ammonia. Nitrification is a biological process that converts ammonia to nitrite and nitrite to nitrate. Denitrification is a process that converts nitrate to nitrite or nitric oxide and then to nitrous oxide or nitrogen gas, which is then released to the atmosphere. Nitrate and nitrite are known to cause adverse health effects in humans. The California DHS has adopted Primary MCLs at Title 22 of the California Code of Regulations (CCR), Table 64431-A, for the protection of human health for nitrite and nitrate that are equal to 1 mg/L and 10 mg/L (measured as nitrogen), respectively. Title 22 CCR, Table 64431-A, also includes a primary MCL of 10,000 ug/L for the sum of nitrate and nitrite, measured as nitrogen.

USEPA has developed a primary MCL and an MCL goal of 1,000 ug/L for nitrite (as nitrogen). For nitrate, USEPA has developed Drinking Water Standards (10,000 ug/L as Primary Maximum Contaminant Level) and Ambient Water Quality Criteria for protection of human health (10,000 ug/L for non-cancer health effects). Recent toxicity studies have indicated a possibility that nitrate is toxic to aquatic organisms.

Inadequate or incomplete denitrification may result in the discharge of nitrate and/or nitrite to the receiving stream. The conversion of ammonia to nitrites and the conversion of nitrites to nitrates present a reasonable potential for the discharge to cause or contribute to an in-stream excursion above the Primary MCLs for nitrite and nitrate. Based on 108 samples collected from 1 February 2005, through 31 May 2006, the MEC for nitrite was 11.8 mg/L, and the MEC for nitrate was 17 mg/L, and therefore, the discharge demonstrates reasonable potential to cause or contribute to an in-stream excursion above the MCLs. Thus, this Order contains AMELs for nitrite and nitrate of 1 mg/L and 10 mg/L, respectively, based on the MCLs. These effluent limitations are included in this Order to assure the treatment process adequately nitrifies and denitrifies the waste stream to protect the beneficial use of municipal and domestic supply.

Based on the sample results in the effluent, the limitations appear to put the Discharger in immediate non-compliance. New or modified control measures may be necessary in order to comply with the effluent limitations, and the new or modified control measures cannot be designed, installed and put into operation within 30 calendar days. Furthermore, the effluent limitations for nitrite and nitrate are a new regulatory requirement within this permit, which becomes applicable to the waste discharge with the adoption of this Order, which was adopted after 1 July 2000. Therefore, a compliance time schedule for compliance with the nitrite and nitrate effluent limitations are established in TSO No. R5-2007-0114 in accordance with CWC section 13300, that requires preparation and implementation of a pollution prevention plan in compliance with CWC section 13263.3.

r. **Oil and Grease.** The Basin Plan includes water quality objectives for oil and grease and floating material in surface waters, which state: "*Waters shall not contain oils, greases, waxes, or other materials in concentrations that cause nuisance, result in a visible film or coating on the surface of the water or on objects in the water, or otherwise adversely affect beneficial uses*" and that: "[w]*ater shall not contain floating material in amounts that cause nuisance or adversely affect beneficial uses*". The antidegradation provisions of the State Water Resources Control Board, Resolution No. 68-16 state that: " *Any activity which produces or may produce a waste or increased volume or concentration of waste and which discharges or proposes to discharge to existing high quality waters will be required to meet waste discharge requirements which will result in the best practicable treatment or control of the discharge necessary to assure that (a) a pollution or nuisance will not occur and (b) the highest water quality consistent with maximum benefit to the people of the State will be maintained*."

Based on information included in self-monitoring reports submitted by the Discharger, the effluent oil and grease was non-detectable (<5.0 mg/L) in 9 of 36 samples in 2006. The maximum effluent concentration was 0.8 mg/L on 17 February 2006. Therefore, the discharge does not have a reasonable potential to cause or contribute to an in-stream excursion above the Basin Plan's narrative objectives for oil and grease and floating material, and State Water Board Resolution No. 68-16 (antidegradation policy). The previous permit, Order 5-00-031, included monthly average and daily maximum effluent limitations for oil and grease of 10 mg/L and 15 mg/L, respectively. This Order removes the effluent limitations for oil and grease based on new information consistent with anti-backsliding requirements of 40 CFR 122.44(l)(2)(i)(B)(*1*). The Regional Water Board finds removing the effluent limitations for oil and grease is consistent with the antidegradation provisions of 40 CFR 131.12 and State Water Board Resolution 68-16. Any impact on existing water quality will be insignificant.

s. **Organo-Chlorine Pesticides.** Organo-chlorine pesticides, and DDT, are on the 303(d) listing. The Basin Plan sets forth a water quality objective that requires that organo-chlorine pesticides not be present in the water column in detectable concentrations. The effluent was monitored for organo-chlorine pesticides, DDT,

and PCBs on ten occasions during the period from 2 February 2005, through 10 May 2006. These constituents were not detected in the effluent, nor in ambient receiving water samples collected between 13 November 2001, and 16 October 2002; therefore, this Order does not contain effluent limitations for these constituents. However, detection limits for DDT, PCB, and most of the organo-chlorine pesticides were not adequate to determine compliance with the water quality criteria; therefore continued monitoring is required in this Order. The previous permit contained effluent limitations for lindane; however, because lindane was not detected in these samples, this Order does not contain lindane effluent limitations. This removal of the lindane effluent limitation is consistent with the anti-backsliding requirements of the CWA and Federal regulations.

t. **Pathogens**. The beneficial uses of the Sacramento-San Joaquin Delta, including Dredger Cut, include municipal and domestic supply, water contact recreation, and agricultural irrigation supply.

The California Department of Health Services (DHS) has developed reclamation criteria, CCR, Division 4, Chapter 3 (Title 22), for the reuse of wastewater. Title 22 requires that for spray irrigation of food crops, parks, playgrounds, schoolyards, and other areas of similar public access, wastewater be adequately disinfected, oxidized, coagulated, clarified, and filtered, and that the effluent total coliform levels not exceed 2.2 MPN/100 ml as a 7-day median. Title 22 is not directly applicable to surface waters; however, the Regional Water Board finds that it is appropriate to apply an equivalent level of treatment to that required by DHS's reclamation criteria because the receiving water is used for irrigation of agricultural land and for contact recreation purposes. To protect public health, DHS recommends that discharges to receiving streams with contact recreation and less than 20:1 dilution be oxidized, coagulated, filtered and adequately disinfected to provide a median total coliform organisms concentration of 2.2 MPN/100 mL at some point in the treatment process. The stringent disinfection criteria of Title 22 are appropriate since the receiving waters, at times, do not provide a 20:1 receiving water to effluent dilution ratio.

To protect the beneficial uses, the Regional Water Board finds that the wastewater must be disinfected and adequately treated to prevent disease. The principal infectious agents (pathogens) that may be present in raw sewage may be classified into three broad groups: bacteria, parasites, and viruses. Tertiary treatment, consisting of chemical coagulation, sedimentation, and filtration, has been found to remove approximately 99.5% of viruses. Filtration is an effective means of reducing viruses and parasites from the waste stream. The wastewater must be treated to tertiary standards (filtered), or equivalent, to protect contact recreational and food crop irrigation uses.

Coliform organisms are intended as an indicator of the effectiveness of the entire treatment train and the effectiveness of removing other pathogens. As coliform organisms are living and mobile, it is impracticable to quantify an exact number of coliform organisms and to establish weekly average limitations. Instead, coliform organisms are measured as a most probable number and regulated

based on a 7-day median limitation. The method of treatment is not prescribed by this Order; however, wastewater must be treated to a level equivalent to that recommended by DHS.

In addition to coliform testing, turbidity effluent limitations have been included as a second indicator of the effectiveness of the treatment process and to assure compliance with the required level of treatment. The tertiary treatment process, or equivalent, is capable of reliably meeting a turbidity limitation of 2 nephelometric turbidity units (NTU) as a daily average. Failure of the filtration system such that virus removal is impaired would normally result in increased particles in the effluent, which result in higher effluent turbidity. Turbidity has a major advantage for monitoring filter performance, allowing immediate detection of filter failure and rapid corrective action. Coliform testing, by comparison, cannot be conducted continuously and requires several hours, to days, to identify high coliform concentrations. Therefore, to ensure compliance with the DHS recommended Title 22 disinfection criteria, weekly average effluent limitations are impracticable for turbidity.

This Order contains effluent limitations and a tertiary level of treatment, or equivalent, necessary to protect the beneficial uses of the receiving water. In accordance with CWC section 13241, the Regional Water Board has considered the following:

i. The past, present and probable future beneficial uses of the receiving stream include municipal and domestic supply, agricultural irrigation, agricultural stock watering, industrial process water supply, industrial service supply, body contact water recreation, other non-body contact water recreation, warm freshwater aquatic habitat, cold freshwater aquatic habitat, warm fish migration habitat, cold fish migration habitat, warm spawning habitat, wildlife habitat, and navigation.

ii. The environmental characteristics of the hydrographic unit, including the quality of the available water, will be improved by the requirement to provide tertiary treatment for this wastewater discharge. Tertiary treatment will allow for the reuse of the undiluted wastewater for food crop irrigation and contact recreation activities that would otherwise be unsafe according to recommendations from the California Department of Health Services (DHS).

iii. Fishable and swimmable water quality conditions can be reasonably achieved through the coordinated control of all factors that affect water quality in the area.

iv. The Discharger has upgraded the Facility to provide tertiary treatment. The tertiary treatment removes pathogens to a level that protects irrigation and recreation, and also aids in meeting discharge limitations for other pollutants, such as heavy metals, reducing the need for advanced treatment specific for those pollutants. The economic impact of requiring a tertiary level of

treatment has been considered. The Discharger estimates the annual tertiary plant operations cost to be $622,000, which excludes the initial cost of the construction to upgrade the Facility. Much of this cost is for maintenance ($188,000), power ($190,000), and depreciation of equipment ($192,000). In 2004, the Discharger initiated a series of user rate increases, and effective July 2007, the Discharger has a monthly user charge (typically for a 3-bedroom home) of $26.71, which covers the plant operation costs.

The loss of beneficial uses within downstream waters without the tertiary treatment requirement, which could include prohibiting the irrigation of food crops and prohibiting public access for contact recreational purposes, would have a detrimental economic impact.

v. The need for developing housing in the area has also been considered. This Order conditionally authorizes the Discharger to increase the permitted discharge flow from 7.0 mgd to 8.5 mgd. Any housing development in the area may be facilitated by improved water quality, which protects the contact recreation and irrigation uses of the receiving water. Any growth in the area will place greater demand on the available resources and will increase the potential for activities, such as contact recreation, that needs an improved surface water quality. .

vi. It is the Regional Water Board's policy, (Basin Plan, page IV-12.00, Policy 2) to encourage the reuse of wastewater. The Regional Water Board requires dischargers to evaluate how reuse or land disposal of wastewater can be optimized. The need to develop and use recycled water is facilitated by providing a tertiary level of wastewater treatment that will allow for a greater variety of uses in accordance with CCR, Title 22. DHS recommends that, in order to protect the public health, relatively undiluted wastewater effluent must be treated to a tertiary level for contact recreational and food crop irrigation uses. Without tertiary treatment, the downstream waters could not be safely utilized for contact recreation or the irrigation of food crops.

Title 22 contains reclamation criteria for the reuse of wastewater, and requires recycled water be disinfected and treated to a tertiary level when used to irrigate food crops where the recycled water may come into contact with the edible portion of the crop. Tertiary treatment will allow for the continued reuse of the undiluted wastewater for food crop irrigation and contact recreation activities, which is otherwise unsafe according to recommendations from the DHS. These crops require irrigation water be treated to a tertiary level to protect public health.

vii. The Regional Water Board has considered the factors specified in CWC section 13263, including considering the provisions in CWC section 13241, in adopting the disinfection and filtration requirements under Title 22 criteria. The Regional Water Board finds, on balance, that these requirements are necessary to protect the beneficial uses of Sacramento-San Joaquin Delta,

which includes Dredger Cut, including water contact recreation and irrigation uses.

u. **pH.** The Basin Plan includes a water quality objective for surface waters (except for Goose Lake) that requires the pH value maintained within the limits of 6.5 and 8.5. To be fully protective of beneficial uses of the receiving water (as explained further in Section V.A.1.g. Receiving Water Limitations of this Fact Sheet), this Order contains water quality-based effluent limitations for pH based on the Basin Plan objectives.

v. **Salinity.** The discharge contains total dissolved solids (TDS), chloride, sulfate, and electrical conductivity (EC). These are water quality parameters that are indicative of the salinity of the water. Their presence in water can be growth limiting to certain agricultural crops and can affect the taste of water for human consumption. There are no USEPA water quality criteria for the protection of aquatic organisms for these constituents. The Basin Plan contains a chemical constituent objective that incorporates State MCLs and contains a narrative objective for EC, TDS, Sulfate, and Chloride.

Table F-4. Salinity Water Quality Criteria/Objectives

Parameter	Agricultural WQ Goal[1]	Secondary MCL[3]	Effluent	
			Monthly Avg	Maximum Monthly Avg
EC (umhos/cm)	700[2]	900, 1600, 2200	621	662
TDS (mg/L)	450[2]	500, 1000, 1500	365	540
Sulfate (mg/L)	N/A	250, 500, 600	23	30
Chloride (mg/L)	106[2]	250, 500, 600	64	77

1 Agricultural water quality goals based on *Water Quality for Agriculture*, Food and Agriculture Organization of the United Nations—Irrigation and Drainage Paper No. 29, Rev. 1 (R.S. Ayers and D.W. Westcot, Rome, 1985)

2 Agricultural water quality goals listed provide no restrictions on crop type or irrigation methods for maximum crop yield. Higher concentrations may require special irrigation methods to maintain crop yields or may restrict types of crops grown.

3 The secondary MCLs are stated as a recommended level, upper level, and a short-term maximum level.

i. **Sulfate**. The secondary MCL for sulfate is 250 mg/L as recommended level, 500 mg/L as an upper level, and 600 mg/L as a short-term maximum. Sulfate concentrations in the effluent ranged from 20 mg/L to 30 mg/L, with an average of 23 mg/L, for 23 samples collected by the Discharger from 16 February 2005, through 16 August 2006. Background concentrations in Dredger Cut (Monitoring location 38’ 04' 28"N, 121’ 28' 08"W) ranged from 7 mg/L to 17 mg/L, with an average of 10 mg/L, for 13 samples collected by the Discharger from 13 November 2001 through 16 October 2002.

ii. **Chloride**. The secondary MCL for chloride is 250 mg/L, as recommended level, 500 mg/L as an upper level, and 600 mg/L as a short-term maximum. The recommended agricultural water quality goal for chloride, that would apply the narrative chemical constituent objective, is 106 mg/L as a long-term average based on Water Quality for Agriculture, Food and Agriculture Organization of the United Nations—Irrigation and Drainage Paper No. 29, Rev. 1 (R.S. Ayers and D.W. Westcot, Rome, 1985). The 106 mg/L water quality goal is intended to protect against adverse effects on sensitive crops when irrigated via sprinklers.

Chloride concentrations in the effluent ranged from 55 mg/L to 77 mg/L, with an average of 64 mg/L, for 23 samples collected by the Discharger from 16 February 2005, through 16 August 2006. Background concentrations in Dredger Cut (Monitoring location 38’ 04' 28"N, 121’ 28' 08"W) ranged from 9 mg/L to 26 mg/L, with an average of 14 mg/L, for 13 samples collected by the Discharger from 13 November 2001 through 16 October 2002.

iii. **Total Dissolved Solids (TDS)**. The secondary MCL for TDS is 500 mg/L as a recommended level, 1000 mg/L as an upper level, and 1500 mg/L as a short-term maximum. The recommended agricultural water quality goal for TDS, that would apply the narrative chemical constituent objective, is 450 mg/L as a long-term average based on Water Quality for Agriculture, Food and Agriculture Organization of the United Nations—Irrigation and Drainage Paper No. 29, Rev. 1 (R.S. Ayers and D.W. Westcot, Rome, 1985). Water Quality for Agriculture evaluates the impacts of salinity levels on crop tolerance and yield reduction, and establishes water quality goals that are protective of the agricultural uses. The 450 mg/L water quality goal is intended to prevent reduction in crop yield, i.e. a restriction on use of water, for salt-sensitive crops. Only the most salt sensitive crops require irrigation water of 450 mg/L or less to prevent loss of yield. Most other crops can tolerate higher TDS concentrations without harm, however, as the salinity of the irrigation water increases, more crops are potentially harmed by the TDS, or extra measures must be taken by the farmer to minimize or eliminate any harmful impacts.

The average TDS effluent concentration was 361 mg/L and ranged from 150 mg/L to 540 mg/L for 23 samples collected by the Discharger from 16 February 2005, through 16 August 2006. The background receiving water TDS ranged from 100 mg/L to 180 mg/L, with an average of 127 mg/L in 13 sampling events performed by the Discharger from 13 November 2001, through 16 October 2002.

iv. **Electrical Conductivity (EC)**. The recommended secondary California MCL for EC is 900 umhos/cm and the agricultural water quality goal, that would apply the narrative chemical constituents objective, is 700 umhos/cm as a long-term average based on Water Quality for Agriculture, Food and Agriculture Organization of the United Nations—Irrigation and Drainage Paper No. 29, Rev. 1 (R.S. Ayers and D.W. Westcot, Rome, 1985). The 700

umhos/cm agricultural water quality goal is intended to prevent reduction in crop yield, i.e. a restriction on use of water, for salt-sensitive crops, such as beans, carrots, turnips, and strawberries. These crops are either currently grown in the area or may be grown in the future. Most other crops can tolerate higher EC concentrations without harm, however, as the salinity of the irrigation water increases, more crops are potentially harmed by the EC, or extra measures must be taken by the farmer to minimize or eliminate any harmful impacts.

A review of the Discharger's monitoring reports from 2 February 2005, through 31 July 2006, shows the maximum monthly average effluent concentration of 662 µmhos/cm, and an average of 621 µmhos/cm for 23 samples. These data show that on average, the effluent does not exceed the most stringent criterion applied as a screening value. The Antidegradation Policy (Resolution No. 68-16) requires that the Discharger implement best practicable treatment or control (BPTC) of its discharge. For salinity, the Regional Water Board finds that limiting effluent salinity to an increment of 500 µmhos/cm over the salinity of the municipal water supply meets BPTC for this discharge. Therefore, this Order includes an effluent limitation of 780 µmhos/cm for EC, based on the municipal water supply EC plus an increment of 500 µmhos/cm.

This Order also requires the Discharger to implement salinity reduction measures to reduce the salinity in its discharge to Dredger Cut. Specifically, Special Provision VI.C.3.b. of this Order requires the Discharger to prepare and implement a Salinity Evaluation and Minimization Plan and to report on its progress in reducing salinity discharges to Dredger Cut. Implementation measures to reduce salt loading may include source control, mineralization reduction, chemical addition reductions, changing to water supplies with lower salinity, and limiting the salt load from domestic and industrial dischargers. Compliance with these requirements will likely result in a salinity reduction in the effluent discharged to the receiving water.

w. **Temperature**. The Thermal Plan requires that, "*The maximum temperature shall not exceed the natural receiving water temperature by more than 20°F.*" The Thermal Plan defines *natural receiving water temperature* as "The temperature of the receiving water …unaffected by any elevated temperature waste discharge or irrigation return waters." Typically the Thermal Plan is applied using upstream receiving water conditions. However, Discharge Point 001 is located at the upstream-end (dead end) of Dredger Cut; thus, there is no upstream flow to determine natural background conditions. As a result, it is not possible to fully apply the Thermal Plan without further information; therefore, this Order requires the Discharger to conduct a temperature study to determine temperature controls necessary to protect the beneficial uses of the receiving water. However, this Order does apply the maximum temperature requirement (86ºF) in the Thermal Plan as an effluent limitation.

x. **Toxicity.** See Section IV.C.5. of the Fact Sheet regarding whole effluent toxicity.

y. **Zinc.** The CTR includes hardness-dependent criteria for the protection of freshwater aquatic life for zinc. The criteria for zinc are presented in dissolved concentrations. USEPA recommends conversion factors to translate dissolved concentrations to total concentrations. The conversion factors for zinc in freshwater are 0.978 for the acute criteria and 0.986 for the chronic criteria. Using the worst-case measured hardness from the effluent, (91 mg/L), the applicable chronic criterion (maximum four-day average concentration) and the applicable acute criterion (maximum one-hour average concentration) are both 110.6 ug/L, as total recoverable.

The MEC for total zinc was 69 ug/L, based on 16 samples collected between 2 February 2005, and 16 May 2006, while the maximum observed upstream receiving water total zinc concentration was 34 ug/L, based on 12 samples collected between 13 November 2001, and 16 October 2002. Therefore, the discharge does not have a reasonable potential to cause or contribute to an in-stream excursion above the CTR criteria for zinc. The previous permit contained effluent limitations for zinc; however, because zinc does not demonstrate a reasonable potential to cause or contribute to an in-stream excursion, this Order does not contain zinc effluent limitations. This removal of the zinc effluent limitation is consistent with the anti-backsliding requirements of the CWA and Federal regulations.

Table F-5.- Summary of Reasonable Potential Analysis [8]

Constituent	CTR #		MEC		B	C	CMC	CCC	Water & Org	Org. Only	Basin Plan	MCL	Reasonable Potential?
Volatile Organics													
1,1-Dichloroethane	28	<	0.05	<	1	5						5	**No**
1,1-Dichloroethene	30	<	0.07	<	0.5	0.057			0.057	3.2		6	**Inconclusive**
1,1,1-Trichloroethane	41	<	0.06	<	2	200						200	**No**
1,1,2-Trichloroethane	42	<	0.07	<	0.5	0.6			0.6	42		5	**No**
1,1,2,2-Tetrachloroethane	37	<	0.06	<	0.5	0.17			0.17	11		1	**Inconclusive**
1,2-Dichlorobenzene	75	<	0.29	<	2	600			2700	17000		600	**No**
1,2-Dichloroethane	29	<	0.06	<	0.5	0.38			0.38	99		0.5	**Inconclusive**
cis-1,2-Dichloroethene		<	0.05	<	0.5	6						6	**No**
1,2-Dichloropropane	31	<	0.05	<	0.5	0.52			0.52	39		5	**No**
1,2,4-Trichlorobenzene	101		0.12	<	5	5						5	**Inconclusive**
1,3-Dichlorobenzene	76		0.07	<	2	400			400	2600			**No**
1,3-Dichloropropylene	32	<	0.06	<	0.5	0.5			10	1700		0.5	**Inconclusive**
1,4-Dichlorobenzene	77		0.5	<	2	5			400	2600		5	**No**
Acrolein	17		2	<	5	320			320	780			**No**
Acrylonitrile	18	<	0.33	<	2	0.059			0.059	0.66			**Inconclusive**
Benzene	19	<	0.06	<	0.5	1			1.2	71		1	**No**
Bromoform	20		1.7	<	2	4.3			4.3	360		80	**No**
Bromomethane	34		0.2	<	2	48			48	4000			**No**
Carbon tetrachloride	21	<	0.06	<	0.5	0.25			0.25	4.4		0.5	**Inconclusive**
Chlorobenzene (mono chlorobenzene)	22	<	0.06	<	2	70			680	21000		70	**No**
Chloroethane	24	<	0.07	<	2								**No**
2-Chloroethylvinyl ether	25	<	0.1	<	1								**No**
Chloroform	26		4.5	<	0.5	80						80.0	**No**
Chloromethane	35		0.4	<	2								**No**
Dibromochloromethane	23		1.1	<	0.5	0.41			0.41	34		80	**Yes, MEC > C**
Bromodichloromethane	27		1.2	<	0.5	0.56			0.56	46		80	**Yes, MEC > C**
Dichloromethane	36		0.31	<	2	4.7			4.7	1600		5	**No**
Ethylbenzene	33	<	0.06	<	2	300			3100	29000		300	**No**
Hexachlorobenzene	88	<	0.6	<	1	0.00075			0.00075	0.00077		1	**Inconclusive**
Hexachlorobutadiene	89	<	0.7	<	1	0.44			0.44	50			**Inconclusive**
Hexachloroethane	91		0.6	<	1	1.9			1.9	8.9			**No**
Naphthalene	94	<	0.9	<	10								**No**
Tetrachloroethene	38	<	0.06	<	0.5	0.8			0.8	8.85		5	**No**
Toluene	39		0.4	<	2	150			6800	200000		150	**No**
trans-1,2-Dichloroethylene	40	<	0.05	<	1	10			700	140000		10	**No**
Trichloroethene	43		0.2	<	2	2.7			2.7	81		5	**No**
Vinyl chloride	44	<	0.05	<	0.5	0.5			2	525		0.5	**Inconclusive**
Methyl t-butyl ether (MtBE)			0.3		2.1	5						5	**No**
Trichlorofluoromethane		<	0.06	<	5	150						150	**No**
1,1,2-Trichloro-1,2,2-Trifluoroethane		<	0.07	<	10	1200						1200	**No**
Styrene		<	0.06	<	0.5	100						100	**No**
Xylenes		<	0.421	<	0.5	20						20	**No**
Semi-Volatile Organics													
1,2-Benzanthracene	60	<	0.6	<	5	0.0044			0.0044	0.049		0.1	**Inconclusive**
1,2-Diphenylhydrazine	85	<	0.8	<	1	0.04			0.04	0.54			**Inconclusive**

2-Chlorophenol	45	<	0.5	<	2	120			120	400			**No**
2,4-Dichlorophenol	46	<	0.4	<	1	93			93	790			**No**
2,4-Dimethylphenol	47	<	0.5	<	2	540			540	2300			**No**
2,4-Dinitrophenol	49	<	1.2	<	5	70			70	14000			**No**
2,4-Dinitrotoluene	82	<	0.9	<	5	0.11			0.11	9.1			**Inconclusive**
2,4,6-Trichlorophenol	55	<	0.5	<	10	2.1			2.1	6.5			**Inconclusive**
2,6-Dinitrotoluene	83	<	0.4	<	5								**No**
2-Nitrophenol	50	<	0.4	<	10								**No**
2-Chloronaphthalene	71	<	0.4	<	10	1700			1700	4300			**No**
3,3-Dichlorobenzidine	78	<	0.6	<	5	0.04			0.04	0.077			**Inconclusive**
3,4-Benzofluoranthene	62	<	0.7	<	10	0.0044			0.0044	0.049			**Inconclusive**
4-Chloro-3-methylphenol	52	<	0.5	<	5								**No**
4,6-Dinitro-2-methylphenol	48	<	0.2	<	10	13.4			13.4	765			**No**
4-Nitrophenol	51	<	0.4	<	10								**No**
4-Bromophenyl phenyl ether	69	<	0.5	<	10								**No**
4-Chlorophenyl phenyl ether	72	<	0.5	<	5								**No**
Acenaphthene	56	<	0.5	<	1	1200			1200	2700			**No**
Acenaphthylene	57	<	0.5	<	10								**No**
Anthracene	58	<	0.6	<	10	9600			9600	110000			**No**
Benzidine	59	<	1	<	5	0.00012			0.00012	0.00054			**Inconclusive**
Benzo(a)pyrene (3,4-Benzopyrene)	61	<	0.8	<	2	0.0044			0.0044	0.049		0.2	**Inconclusive**
Benzo(g,h,i)perylene	63	<	0.7	<	5								**No**
Benzo(k)fluoranthene	64	<	0.8	<	2	0.0044			0.0044	0.049			**Inconclusive**
Bis(2-chloroethoxy) methane	65	<	0.5	<	5								**No**
Bis(2-chloroethyl) ether	66	<	0.8	<	1	0.031			0.031	1.4			**Inconclusive**
Bis(2-chloroisopropyl) ether	67	<	0.8	<	10	1400			1400	170000			**No**
Bis(2-ethylhexyl) phthalate	68	<	0.6		1.2	1.8			1.8	5.9		4	**Inconclusive**
Butyl benzyl phthalate	70	<	1	<	10	3000			3000	5200			**No**
Chrysene	73	<	0.6	<	5	0.0044			0.0044	0.049			**Inconclusive**
Di-n-butylphthalate	81	<	0.8	<	10	2700			2700	12000			**No**
Di(n-octyl) phthalate	84	<	0.7	<	10								**No**
Dibenzo(a,h)anthracene	74	<	0.5	<	0.1	0.0044			0.0044	0.049			**Inconclusive**
Diethyl phthalate	79	<	0.8	<	2	23000			23000	120000			**No**
Dimethyl phthalate	80	<	0.8	<	2	313000			313000	2900000			**No**
Fluoranthene	86	<	0.6	<	10	300			300	370			**No**
Fluorene	87	<	0.5	<	10	1300			1300	14000			**No**
Hexachlorocyclopentadiene	90	<	0.8	<	5	50			240	17000		50	**No**
Indeno(1,2,3-c,d)pyrene	92	<	0.5	<	0.05	0.0044			0.0044	0.049			**Inconclusive**
Isophorone	93	<	0.5	<	1	8.4			8.4	600			**No**
N-Nitrosodiphenylamine	98	<	0.7	<	1	5			5	16			**No**
N-Nitrosodimethylamine	96	<	0.5	<	5	0.00069			0.00069	8.1			**Inconclusive**
N-Nitrosodi-n-propylamine	97	<	0.5	<	5	0.005			0.005	1.4			**Inconclusive**
Nitrobenzene	95	<	0.5	<	10	17			17	1900			**No**
Pentachlorophenol	53	<	0.6	<	1	0.28			0.28	8.2		1	**Inconclusive**
Phenanthrene	99	<	0.7	<	5								**No**
Phenol	54	<	0.4	<	1	21000			21000	4600000			**No**
Pyrene	100	<	0.8	<	10	960			960	11000			**No**

Inorganics													
Aluminum			200		680.00	87	750.0 (1)	87.0 (1)				200	**Yes, MEC > C**
Antimony	1	<	5	<	5.00	6			14	4300		6	**No**
Arsenic	2		3.8		5.00	10	340.0	150.0			10	10	**No**
Asbestos	15	<	0.20 (3)	<	0.20 (3)	7.00 (3)						7.00 (3)	**No**
Barium			44		49.00	100					100	1000	**No**
Beryllium	3	<	1	<	1.00	4						4	**No**
Cadmium	4	<	1	<	0.25	1.25	1.7 (2)	1.25 (2)				5	**No**
Chromium (III)						101.71	853.3 (2)	101.7 (2)					**No**
Chromium (VI)	5b			<	5.00	11	16.0	11.0					**No**
Chromium (total)	5a	<	5		2.50	50						50	**No**
Copper	6		3.21		5.00	8.61	12.8 (2)	8.61 (2)	1300		10	1000	**No**
Cyanide	14	<	5	<	5.00	5.2	22.0	5.2	700	220000	10	150	**No**
Fluoride			490		1700	2000						2000	**No**
Iron			130		1200	300		1000.0 (1)			300	300	**No**
Lead	7	<	2	<	0.50	2.82	72.4 (2)	2.82 (2)				15	**Inconclusive**
Manganese			38.3		66.00	50					50	50	**Yes, B > C**
Mercury	8		0.0072		0.0161	0.05			0.05	0.051		2	**No**
Nickel	9	<	5	<	5.00	25.04	225.2 (2)	25.0 (2)	610	4600		100	**No**
Selenium	10	<	20	<	5.00	5	20.0	5.0				50	**Inconclusive**
Silver	11	<	5	<	1.00	0.91	0.91 (2)				10	100	**Inconclusive**
Thallium	12	<	20	<	1	1.7			1.7	6.3		2	**Inconclusive**
Tributyltin			0.0063		0.009	0.072	0.42	0.072					**No**
Zinc	13		69		34	57.45	110.6 (2)	110.6 (2)			100	5000	**No**
Molybdenum			7.2			10						10	**No**
Pesticides													
4,4'-DDD	110	<	0.002	<	0.05	0.00083			0.00083	0.00084			**Inconclusive**
4,4'-DDE	109	<	0.003	<	0.05	0.00059			0.00059	0.00059			**Inconclusive**
4,4'-DDT	108	<	0.002	<	0.01	0.00059	1.1	0.001	0.00059	0.00059			**Inconclusive**
alpha-Endosulfan	112	<	0.003	<	0.02	0.056	0.22	0.056	110	240			**No**
alpha-Hexachlorocyclohexane (BHC)	103	<	0.003	<	0.01	0.0039			0.0039	0.013			**Inconclusive**
Alachlor		<	0.012	<	1	2	76					2	**No**
Aldrin	102	<	0.002	<	0.005	0.00013	3		0.00013	0.00014			**Inconclusive**
beta-Endosulfan	113	<	0.002	<	0.01	0.056	0.22	0.056	110	240			**No**
beta-Hexachlorocyclohexane	104	<	0.002	<	0.005	0.014			0.014	0.046			**No**
Chlordane	107	<	0.01	<	0.1	0.00057	2.4	0.0043	0.00057	0.00059		0.1	**Inconclusive**
delta-Hexachlorocyclohexane	106	<	0.002	<	0.005								**No**
Dieldrin	111		0.006	<	0.01	0.00014	0.24	0.056	0.00014	0.00014			**Inconclusive**
Endosulfan sulfate	114	<	0.002	<	0.05	0.056		0.056	110	240			**No**
Endrin	115	<	0.002	<	0.01	0.036	0.086	0.036	0.76	0.81		2	**No**
Endrin Aldehyde	116	<	0.003	<	0.01	0.76			0.76	0.81			**No**
Heptachlor	117	<	0.003	<	0.01	0.00021	0.52	0.0038	0.00021	0.00021		0.01	**Inconclusive**
Heptachlor Epoxide	118	<	0.002	<	0.01	0.0001	0.52	0.0038	0.0001	0.00011		0.01	**Inconclusive**
Lindane (gamma-BHC)	105	<	0.002	<	0.02	0.019	0.95	0.08 (1)	0.019	0.063		0.2	**Inconclusive**
PCBs sum	119-125	<	0.03	<	0.5	0.00017		0.014	0.00017	0.00017		0.5	**Inconclusive**
PCB-1016	119	<	0.05	<	0.5	0.00017			0.00017	0.00017			**Inconclusive**
PCB-1221	120	<	0.06	<	0.5	0.0002	0.73	0.0002	0.00073	0.00075			**Inconclusive**

PCB-1232	121	<	0.04	<	0.5	0.0002	0.73	0.0002	0.00073	0.00075			**Inconclusive**
PCB-1242	122	<	0.06	<	0.5	0.0002	0.73	0.0002	0.00073	0.00075			**Inconclusive**
PCB-1248	123	<	0.05	<	0.5	0.0002	0.73	0.0002	0.00073	0.00075			**Inconclusive**
PCB-1254	124	<	0.04	<	0.5	0.0002	0.73	0.0002	0.00073	0.00075			**Inconclusive**
PCB-1260	125	<	0.03	<	0.5	0.0002	0.73	0.0002	0.00073	0.00075			**Inconclusive**
Toxaphene	126	<	0.1	<	0.5	0.0002	0.73	0.0002	0.00073	0.00075		3	**Inconclusive**
Atrazine		<	0.015	<	1	1	1500 (1)					1	**Inconclusive**
Bentazon		<	0.09	<	2	18						18	**No**
Carbofuran		<	0.396	<	5	18						18	**No**
2,4-D		<	0.201	<	10	70			100 (1)			70	**No**
Dalapon		<	0.686	<	10	110			110 (1)			200	**No**
1,2-Dibromo-3-chloropropane (DBCP)		<	1.82	<	0.01	0.2						0.2	**Inconclusive**
Di(2-ethylhexyl)adipate		<	0.042	<	5	400						400	**No**
Dinoseb		<	0.096	<	2	7						7	**No**
Diquat		<	0.552	<	4	20						20	**No**
Endothal		<	8.21	<	45	100						100	**No**
Ethylene Dibromide		<	0.599	<	0.02	0.05						0.05	**Inconclusive**
Glyphosate		<	1.659	<	25	700						700	**No**
Methoxychlor		<	0.003	<	10	0.03	0.03					30	**Inconclusive**
Molinate (Ordram)		<	0.017	<	2	13	13 (4)					20	**No**
Oxamyl		<	0.128	<	20	50						50	**No**
Picloram		<	0.059	<	1	500						500	**No**
Simazine (Princep)		<	0.012	<	4	4						4	**Inconclusive**
Thiobencarb		<	0.015	<	1	1	3 (4)					1	**Inconclusive**
2,3,7,8-TCDD (Dioxin)	16	<	0.000986		0.00132	1.3E-08			1.3E-08	1.4E-08		0.00003	**No**
2,4,5-TP (Silvex)		<	0.086			10			10 (1)			50	**No**
Diazinon		<	0.006			0.05	0.080 (4)	0.050 (4)					**No**
Chlorpyrifos		<	0.006			0.014	0.020 (4)	0.014 (4)					**No**
Other Constituents													
Ammonia (as N)			25 (5)			2.08 (5)	2.14 (1,5)	2.08 (1,5)					**Yes, MEC > C**
Chloride			77 (5)			230 (1,5)	860 (1,5)	230 (1,5)				250 (5)	**No**
Foaming Agents (MBAS)			450			500						500	**No**
Nitrate (as N)			17.0 (5)			10 (5)						10 (5)	**Yes, MEC > C**
Nitrite (as N)			11.8 (5)			1 (5)						1 (5)	**Yes, MEC > C**
Phosphorus, Total (as P)			1.20 (5)										**No**
Specific conductance (EC)			662 (6)			700 (6)					700(5)	900 (6)	**No**

General Notes: All units ug/L unless otherwise noted.
All inorganic concentrations are given as total recoverable.
MEC = Maximum Effluent Concentrations based on data from February 2005 through August 2006
B = Maximum Receiving Water Concentration or lowest detection level, if non-detect
C = Criterion used for Reasonable Potential Analysis
CMC = Criterion Maximum Concentration (CTR criterion unless otherwise noted)
CCC = Criterion Continuous Concentration (CTR criterion unless otherwise noted)
MCL = Drinking Water Standards Maximum Contaminant Levels
Basin Plan = Numeric Site-specific Basin Plan Water Quality Objective

Footnotes:
(1) USEPA National Recommended Ambient Water Quality Criteria
(2) Calculated using $CaCO_3$ effluent hardness of 42 mg/L
(3) Units in million fibers per liter (mfl)
(4) Department of Fish and Game Criteria, March 2000
(5) Units in mg/L
(6) Maximum monthly average, Units in umhos/cm

4. **WQBEL Calculations**

a. Effluent limitations for aluminum, ammonia, dichlorobromomethane, and dibromochloromethane were calculated in accordance with section 1.4 of the SIP and the TSD. The following paragraphs describe the methodology used for calculating effluent limitations.

b. **Effluent Limitation Calculations.** In calculating maximum effluent limitations, the effluent concentration allowances were set equal to the criteria/standards/objectives.

$$ECA_{acute} = CMC \qquad ECA_{chronic} = CCC$$

For the human health, agriculture, or other long-term criterion/objective, a dilution credit can be applied. The ECA is calculated as follows:

$$ECA_{HH} = HH + D(HH - B)$$

where:

ECA_{acute} = effluent concentration allowance for acute (one-hour average) toxicity criterion

$ECA_{chronic}$ = effluent concentration allowance for chronic (four-day average) toxicity criterion

ECA_{HH} = effluent concentration allowance for human health, agriculture, or other long-term criterion/objective

CMC = criteria maximum concentration (one-hour average)

CCC = criteria continuous concentration (four-day average, unless otherwise noted)

HH = human health, agriculture, or other long-term criterion/objective

D = dilution credit

B = maximum receiving water concentration

Acute and chronic toxicity ECAs were then converted to equivalent long-term averages (LTA) using statistical multipliers and the lowest is used. Additional statistical multipliers were then used to calculate the maximum daily effluent limitation (MDEL) and the average monthly effluent limitation (AMEL).

Human health ECAs are set equal to the AMEL and a statistical multiplier is used to calculate the MDEL.

$$AMEL = mult_{AMEL}\left[\min\left(\overbrace{M_A ECA_{acute}}^{LTA_{acute}}, M_C ECA_{chronic}\right)\right]$$

$$MDEL = mult_{MDEL}\left[\min\left(M_A ECA_{acute}, \underbrace{M_C ECA_{chronic}}_{LTA_{chronic}}\right)\right]$$

$$MDEL_{HH} = \left(\frac{mult_{MDEL}}{mult_{AMEL}}\right) AMEL_{HH}$$

where: $mult_{AMEL}$ = statistical multiplier converting minimum LTA to AMEL
$mult_{MDEL}$ = statistical multiplier converting minimum LTA to MDEL
M_A = statistical multiplier converting CMC to LTA
M_C = statistical multiplier converting CCC to LTA

Water quality-based effluent limitations were calculated for aluminum, ammonia, dichlorobromomethane, and chlorodibromomethane as follows in Tables F-6 through F-12, below.

Table F- 6
WQBEL Calculations for Aluminium

	Acute	Chronic
Criteria (ug/L) (1)	750	87
Dilution Credit	No Dilution	No Dilution
ECA	750	87
ECA Multiplier	0.24	0.42
LTA	178	37
AMEL Multiplier (95th%)	(2)	1.8
AMEL (ug/L)	(2)	**66**
MDEL Multiplier (99th%)	(2)	4.21
MDEL (ug/L)	(2)	**155**

(1) USEPA Ambient Water Quality Criteria
(2) Limitations based on chronic LTA (Chronic LTA < Acute LTA)

Table F- 7
WQBEL Calculations for Ammonia

	Annual CV[1] = 2.88		
	Acute	Chronic	
		30-day	4-day
Criteria (mg/L) (2)	4.28	1.19	2.98
Dilution Credit	No Dilution	No Dilution	No Dilution
ECA	4.28	1.19	2.98
ECA Multiplier	0.09	0.36 (3)	0.17
LTA	0.40	0.43	0.6
AMEL Multiplier (95th%)	3.26	(4)	(4)
AMEL (mg/L)	**1.3**	(4)	(4)
MDEL Multiplier (99th%)	10.57	(4)	(4)
MDEL (mg/L)	**4.3**	(4)	(4)

(1) Coefficient of Variation
(2) USEPA Ambient Water Quality Criteria
(3) Calculated based on the TSD modification presented in the 22 December 1999 Federal Register notice where $\sigma^2 = \ln(CV^2/30 + I)$
(4) Limitations based on acute LTA ($LTA_{acute} < LTA_{chronic}$)

Table F- 8
WQBEL Calculations for Dichlorobromomethane

	Acute	Chronic
Criteria (mg/L)	N/A	0.56
Dilution Credit	N/A	0
ECA	N/A	0.56
AMEL (mg/L) [1]	N/A	**0.56**
MDEL/AMEL Multiplier[2]	N/A	2.0
MDEL (mg/L)	N/A	**1.1**

(1) AMEL = ECA per section 1.4.B, Step 6 of SIP
(2) Assumes sampling frequency n<=4. Uses MDEL/AMEL multiplier from Table 2 of SIP.

Table F- 9
WQBEL Calculations for Chlorodibromomethane

	Acute	Chronic
Criteria (mg/L)	N/A	0.41
Dilution Credit	N/A	0
ECA	N/A	0.41
AMEL (mg/L) [1]	N/A	**0.41**
MDEL/AMEL Multiplier[2]	N/A	2.0
MDEL (mg/L)	N/A	**0.82**

(1) AMEL = ECA per section 1.4.B, Step 6 of SIP
(2) Assumes sampling frequency n<=4. Uses MDEL/AMEL multiplier from Table 2 of SIP.

c. Total coliform and turbidity effluent limits are based on tertiary treatment standards to protect beneficial uses of recreational and food crop irrigation (Refer to the previous subsection IV.C.3.t. pathogens).

d. Manganese effluent limit is based on the site-specific object for the Delta (Refer to subsection IV.C.3.n).

e. Nitrite and Nitrate effluent limits are based on the State Primary MCLs to protect beneficial uses of municipal and domestic supply (Refer to subsection IV.C.3.q).

Summary of Water Quality-based Effluent Limitations
Discharge Point 001

Table F-10. Summary of Water Quality-based Effluent Limitations

Parameter	Units	Effluent Limitations				
		Average Monthly	Average Weekly	Maximum Daily	Instantaneous Minimum	Instantaneous Maximum
Aluminum	ug/L	66		155		
Manganese	ug/L			50		
Ammonia (as N)	mg/L	1.3		4.3		
Dichlorobromomethane	ug/L	0.56		1.1		
Chlorodibromomethane	ug/L	0.41		0.82		
Total coliform[1]	MPN/100ml					240

Parameter	Units	Effluent Limitations				
		Average Monthly	Average Weekly	Maximum Daily	Instantaneous Minimum	Instantaneous Maximum
Turbidity[2]	NTU					10
pH	Standard units				6.5	8.5
Nitrite (as N)	mg/L	1				
Nitrate (as N)	mg/L	10				

1. Effluent total coliform also shall not exceed i.) 2.2 MPN/100ml, as a 7-day median; and ii). 23 MPN/100ml, more than once in any 30-day period.
2. Effluent turbidity also shall not exceed i.) 2 NTU as a daily average; and ii.) 5 NTU, more than 5% of the time within a 24-hour period.

5. **Whole Effluent Toxicity (WET)**

For compliance with the Basin Plan's narrative toxicity objective, this Order requires the Discharger to conduct whole effluent toxicity testing for acute and chronic toxicity, as specified in the Monitoring and Reporting Program (Attachment E, Section V.). This Order also contains effluent limitations for acute toxicity and requires the Discharger to implement best management practices to investigate the causes of, and identify corrective actions to reduce or eliminate effluent toxicity.

a. **Acute Aquatic Toxicity.** The Basin Plan contains a narrative toxicity objective that states, "*All waters shall be maintained free of toxic substances in concentrations that produce detrimental physiological responses in human, plant, animal, or aquatic life.*" (Basin Plan at III-8.00). The Basin Plan also states that "…*effluent limits based upon acute biotoxicity tests of effluents will be prescribed where appropriate*…". USEPA Region 9 provided guidance for the development of acute toxicity effluent limitations in the absence of numeric water quality objectives for toxicity in its document titled "Guidance for NPDES Permit Issuance", dated February 1994. In section B.2. "Toxicity Requirements" (pgs. 14-15) it states that, "*In the absence of specific numeric water quality objectives for acute and chronic toxicity, the narrative criterion 'no toxics in toxic amounts' applies. Achievement of the narrative criterion, as applied herein, means that ambient waters shall not demonstrate for acute toxicity: 1) less than 90% survival, 50% of the time, based on the monthly median, or 2) less than 70% survival, 10% of the time, based on any monthly median. For chronic toxicity, ambient waters shall not demonstrate a test result of greater than 1 TUc."* Accordingly, effluent limitations for acute toxicity have been included in this Order as follows:

Acute Toxicity. Survival of aquatic organisms in 96-hour bioassays of undiluted waste shall be no less than:

Minimum for any one bioassays ---------- 70%
Median for any three or more consecutive bioassays --------- 90%

b. **Chronic Aquatic Toxicity.** The Basin Plan contains a narrative toxicity objective that states, "*All waters shall be maintained free of toxic substances in concentrations that produce detrimental physiological responses in human, plant,*

animal, or aquatic life." (Basin Plan at III-8.00) Based on whole effluent chronic toxicity testing performed by the Discharger from February 2005, through October 2006, the discharge has reasonable potential to cause or contribute to an to an in-stream excursion above of the Basin Plan's narrative toxicity objective.

No dilution has been granted for the chronic condition. Therefore, chronic toxicity testing results exceeding 1 chronic toxicity unit (TUc) demonstrates the discharge has a reasonable potential to cause or contribute to an exceedance of the Basin Plan's narrative toxicity objective.

Numeric chronic WET effluent limitations have not been included in this Order. The SIP contains implementation gaps regarding the appropriate form and implementation of chronic toxicity limits. This has resulted in the petitioning of a NPDES permit in the Los Angeles Region[1] that contained numeric chronic toxicity effluent limitations. To address the petition, the State Water Board adopted WQO 2003-012 directing its staff to revise the toxicity control provisions in the SIP. The State Water Board states the following in WQO 2003-012*, "In reviewing this petition and receiving comments from numerous interested persons on the propriety of including numeric effluent limitations for chronic toxicity in NPDES permits for publicly-owned treatment works that discharge to inland waters, we have determined that this issue should be considered in a regulatory setting, in order to allow for full public discussion and deliberation. We intend to modify the SIP to specifically address the issue. We anticipate that review will occur within the next year. We therefore decline to make a determination here regarding the propriety of the final numeric effluent limitations for chronic toxicity contained in these permits."* The process to revise the SIP is currently underway. Proposed changes include clarifying the appropriate form of effluent toxicity limits in NPDES permits and general expansion and standardization of toxicity control implementation related to the NPDES permitting process. Since the toxicity control provisions in the SIP are under revision it is infeasible to develop numeric effluent limitations for chronic toxicity. Therefore, this Order requires that the Discharger meet best management practices for compliance with the Basin Plan's narrative toxicity objective, as allowed under CFR Part 122.44(k).

To ensure compliance with the Basin Plan's narrative toxicity objective, the Discharger is required to conduct chronic whole effluent toxicity testing, as specified in the Monitoring and Reporting Program (Attachment E, Section V.). Furthermore, Special Provisions VI.C.2.a. of this Order requires the Discharger to investigate the causes of, and identify and implement corrective actions to reduce or eliminate effluent toxicity. If the discharge demonstrates a pattern of toxicity exceeding the numeric toxicity monitoring trigger, the Discharger is required to initiate a Toxicity Reduction Evaluation (TRE), in accordance with an approved TRE work plan. The numeric toxicity monitoring trigger is not an

[1] In the Matter of the Review of Own Motion of Waste Discharge Requirements Order Nos. R4-2002-0121 [NPDES No. CA0054011] and R4-2002-0123 [NPDES NO. CA0055119] and Time Schedule Order Nos. R4-2002-0122 and R4-2002-0124 for Los Coyotes and Long Beach Wastewater Reclamation Plants Issued by the California Regional Water Quality Control Board, Los Angeles Region SWRCB/OCC FILES A-1496 AND 1496(a)

effluent limitation, it is the toxicity threshold at which the Discharger is required to perform accelerated chronic toxicity monitoring, as well as, the threshold to initiate a TRE if a pattern of effluent toxicity has been demonstrated.

D. Final Effluent Limitations

1. Mass-based Effluent Limitations.

CFR Part 122.45(f)(1) requires effluent limitations be expressed in terms of mass, with some exceptions, and CFR Part 122.45(f)(2) allows pollutants that are limited in terms of mass to additionally be limited in terms of other units of measurement. This Order includes effluent limitations expressed in terms of mass and concentration. In addition, pursuant to the exceptions to mass limitations provided in CFR 122.45(f)(1), some effluent limitations are not expressed in terms of mass, such as pH and temperature, and when the applicable standards are expressed in terms of concentration (e.g. CTR criteria and MCLs) and mass limitations are not necessary to protect the beneficial uses of the receiving water.

Mass-based effluent limitations were calculated based upon the permitted average daily discharge flow allowed in Sections IV.A.1.h. and IV.A.2.b. of the Limitations and Discharge Requirements.

2. Averaging Periods for Effluent Limitations.

CFR Part 122.45 (d) requires average weekly and average monthly discharge limitations for publicly owned treatment works (POTWs) unless impracticable. However, for toxic pollutants and pollutant parameters in water quality permitting, the USEPA recommends the use of a maximum daily effluent limitation in lieu of average weekly effluent limitations for two reasons. "*First, the basis for the 7-day average for POTWs derives from the secondary treatment requirements. This basis is not related to the need for assuring achievement of water quality standards. Second, a 7-day average, which could comprise up to seven or more daily samples, could average out peak toxic concentrations and therefore the discharge's potential for causing acute toxic effects would be missed.*" (TSD, pg. 96) This Order utilizes maximum daily effluent limitations in lieu of average weekly effluent limitations for ammonia, aluminum, manganese, dichlorobromomethane, and chlorodibromomethane as recommended by the TSD for the achievement of water quality standards and for the protection of the beneficial uses of the receiving stream. Furthermore, for BOD, TSS, pH, Total coliform, and turbidity, weekly average effluent limitations have been replaced or supplemented with effluent limitations utilizing shorter averaging periods. The rationale for using shorter averaging periods for these constituents is discussed in Attachment F, Section IV.C.3., above.

3. Satisfaction of Anti-Backsliding Requirements.

Some limitations in this Order are less stringent than those in the previous permit, Order No. 5-00-031. However, since the issuance of Order No. 5-00-031, the Discharger upgraded the Facility to provide a higher level of treatment, including tertiary filtration and UV Disinfection. Based upon this new information obtained

from the tertiary level treated municipal effluent, as discussed below, the relaxation of limitations is consistent with the anti-backsliding requirements of the CWA and Federal regulations.

a. **Effluent Limitations.**

Chlorine Residual. Order No. 5-00-031 required chlorine residual weekly and daily averages effluent limitations at 0.01 and 0.019 respectively. This Order removes these chlorine residual limitations, because the Discharger discontinued the use of chlorine for disinfection, and now uses ultraviolet pathogen deactivation (UV Disinfection).

Dissolved Oxygen (DO). Order No. 5-00-031 required a minimum daily average effluent limitation for DO of 5.0 mg/L and included a discharge prohibition that prohibited the discharge to Dredger Cut when DO concentrations in Dredger Cut, Bishop Cut, or White Slough were below 5 mg/L. These requirements were included in the previous Order, due to DO concerns from the discharge of secondary treated wastewater, which were based on dissolved oxygen levels measured below 5 mg/L in Dredger Cut when discharges were occurring. The Discharger has since upgraded the Facility to a tertiary level of treatment, which has reduced the discharge of oxygen demanding substances. Analytical results from 462 monitoring samples obtained from February 2005, through December 2006, indicated that the average effluent DO concentration was 7.4 mg/L, with a minimum of 5 mg/L, and that the minimum dissolved oxygen level in Dredger Cut was 5 mg/L. Thus, the discharge of the higher-level treated effluent does not cause violations of the Basin Plan to occur in Dredger Cut. Furthermore the Discharger is constructing nitrification facilities that will further reduce oxygen demanding substances by removing ammonia. Based on this new information, this order removes the DO discharge prohibition, but maintains the DO effluent limitation of 5 mg/L as a daily average.

Settleable Solids, and Oil and Grease. Order No. 5-00-31 required a daily maximum effluent limitation of 0.1 ml/L for settleable solids, and 15 mg/L for oil and grease. Analytical monitoring results obtained during the period February 2005, through July 2006, showed that settleable solids was detected at 0.1 ml/L in 5 out of 345 samples (340 were non-detects), and oil and grease was detected in 54 samples at a maximum concentration of 1.1 mg/L. Based on this new information, this Order removes the effluent limitations for settleable solids, and oil and grease.

Metals. Order No. 5-00-31 required effluent limitations for cyanide, lead, and zinc. However, these constituents were not detected in the tertiary level treated effluent samples collected between 2 February 2005, and 15 May 2006; nor were these constituents detected in ambient receiving water samples collected between 13 November 2001, and 16 October 2002. Therefore, the discharge does not demonstrate a reasonable potential to cause or contribute to an in-stream excursion above the CTR criteria for these constituents. Based on this new information, this Order removes the effluent limitations for cyanide, lead, and zinc.

Lindane. Order No. 5-00-31 required effluent limitations for lindane. However, lindane was not detected in the tertiary level treated effluent samples collected between 2 February 2005, and 15 May 2006; nor was it detected in ambient receiving water samples collected between 13 November 2001, and 16 October 2002. Therefore, the discharge does not demonstrate a reasonable potential to cause or contribute to an in-stream excursion above the water quality objectives for lindane. Based on this new information, this Order removes the effluent limitations for lindane.

Temperature. Order No. 5-00-31 required effluent and receiving water limitations based on the Thermal Plan. However, to implement these limitations it is necessary to measure upstream receiving water temperature. Since the effluent discharge is at the terminus of Dredger Cut, a dead-end slough that does not receive up stream flow, the effluent and receiving water limitations based on the Thermal Plan cannot be applied to this discharge (See section III.C.2 of this Fact Sheet for further explanation). This Order includes a maximum effluent temperature limitation of 86ºF, per the Thermal Plan, and requires the Discharger to conduct a temperature study to determine necessary temperature effluent limitations to adequately protect the beneficial uses of the receiving water. This Order may be reopened after the completion of the temperature study to modify or include additional temperature effluent or receiving water limitations based on the study results.

b. **Receiving Water Limitations.**

pH. Order No. 5-00-31 required a receiving water limitation for pH that limits the normal ambient receiving water to fall below 6.5, exceed 8.5, or change by more than 0.5 units. The Basin Plan includes a water quality objective for surface waters (except for Goose Lake) that "…*Changes in normal ambient pH levels shall not exceed 0.5 units in fresh waters with designated COLD or WARM beneficial uses.*" Effluent Limitations for pH are included in this Order based on the Basin Plan objectives for pH. Since Dredger Cut is a dead-end slough that does not receive ambient upstream flows, this Order removes the receiving water limitation for the change in pH, because changes in pH levels cannot be determined.

Temperature. See previous section a. Effluent Limitations, Temperature, and section III.C.2 of this Fact Sheet.

This relaxation of these effluent and receiving water limitations is consistent with the anti-backsliding requirements of the CWA and Federal regulations, the antidegradation provisions of CFR Part 131.12, and State Water Resources Control Board Resolution 68-16. Any impact on existing water quality will be insignificant.

4. **Satisfaction of Antidegradation Policy**

a. **Surface Water.** The permitted surface water discharge is consistent with the antidegradation provisions of CFR Part 131.12 and State Water Resources

Control Board Resolution 68-16. This Order allows for an increase in the volume and mass of pollutants discharged to Dredger Cut, by allowing the discharge flow to increase from 7.0 mgd up to 8.5 mgd, which is the design capacity of the Facility. The increase in the discharge allows wastewater utility service necessary to accommodate housing and economic expansion in the area, and is considered to be a benefit to the people of the State. The discharge is a Title 22, or equivalent, tertiary-level treated wastewater, which is a high level of treatment of sewage waste that is considered best practicable treatment or control (BPTC) for most constituents in the wastewater and will result in attaining water quality standards applicable to the discharge.

The previous permit provided for an increase in discharge flow to 8.5 mgd of secondary treated wastewater, but was contingent upon the Discharger demonstrating compliance with the Basin Plan dissolved oxygen (DO) water quality objective. The Discharger has since increased treatment to a tertiary level, which has reduced the loading of oxygen demanding substances. Analytical results obtained from February 2005 through December 2006, for both the effluent (see the previous section, Satisfaction of Anti-backsliding Requirements) and receiving water indicate that the tertiary treated effluent does not adversely affect the DO of the receiving water. The average DO level at Dredger Cut (R-2) was 8.8 mg/L with a minimum level of 5 mg/L, based on 462 monitoring samples, thus demonstrating compliance with the Basin Plan DO water quality objective. However, the discharge from the Facility may currently cause or contribute to exceedances of other applicable water quality objectives (see section IV.C.3. of the Fact Sheet). Therefore, prior to allowing an increase in the discharge flow to 8.5 mgd, this Order requires the Discharger to comply with the conditions set forth in Special Provisions VI.C.7.b. to ensure compliance with Resolution 68-16. Special Provisions VI.C.7.b., requires compliance with all effluent and receiving water limitations (except the effluent limitations for aluminum) and construction of the Phase III facility improvements to provide full nitrification/denitrification at the 8.5 mgd flow rate. Compliance with the final effluent limitations for aluminum is not necessary, because the receiving water aluminum concentration exceeds the effluent concentration, thus there is not an antidegradation issue.

As discussed in section II.E.2., above, the Discharger plans to accept wastewater flows from the San Joaquin County Flag City Service Area, which will eliminate San Joaquin County's surface water discharge into Highline Canal. Should the Discharger acquire wastewater flows from the Flag City service area (hereinafter Wastewater Flow) prior to compliance with Special Provisions VI.C.7.b., this Order provides for an increase in permitted flow of 0.2 mgd to Dredger Cut. Currently, the Flag City Wastewater Treatment Plant provides secondary-level treatment of the Wastewater Flow, and is permitted to discharge an average dry weather flow of 0.16 mgd to Highline Canal, which is a tributary to Dredger Cut. The Flag City discharge is approximately 1.5 miles upstream from the Facility's discharge to Dredger Cut. The increase in discharge is not expected to increase the volume or mass of pollutants in the receiving water since: (1) the Wastewater Flow will receive a higher level of treatment that is considered BPTC for most

constituents of concern, and (2) the increase does not represent an increase in discharge to the receiving water, it is merely a change in discharge point.

The following Table F-11 lists the pollutants of concern and the corresponding effluent concentrations and mass loadings. As indicated, the effluent concentrations for all constituents will remain the same or decrease, and the increase in mass for some constituents will increase an estimated 21% (based on the percent of increase in flow), which represents a small increase in mass for the majority of constituents. Because the tertiary-level treated effluent is discharged into the terminus of Dredger Cut, background receiving water levels are not attainable; therefore, the best representative background levels were measured approximately 4 miles west of the discharge in White Slough. This data was collected monthly starting 13 November 2001, to 16 October 2002, and represents the ambient conditions of the receiving water and was used to analyze the assimilative capacity of the receiving water for the following pollutant loadings.

i) **Inorganic Constituents.** In the case of inorganic constituents, most concentrations in the receiving water were below water quality standards, and therefore demonstrate assimilative capacity for this increase. Molybdenum was not measured in the receiving water; however, because it is not a 303(d) listed pollutant and the levels measured in the effluent are below the water quality objective, it is reasonable to assume that the receiving water has the assimilative capacity for this pollutant. For aluminum and manganese, effluent limitations are established in this Order and the Discharger is required to implement additional BPTCs that will result in compliance with these limits.

ii) **Organic Constituents.** For the organic constituents, some trihalomethanes concentrations were projected to decrease in the discharge based on the limits established in this Order. For other organic constituents, the concentration levels in the receiving water are well below respective water quality objectives and therefore demonstrate assimilative capacity for these pollutants in the receiving water.

iii) **Oxygen Demanding Substances.** For oxygen demanding substances (i.e. BOD, TSS, and ammonia), due to more stringent ammonia limitations and the requirement that wastewater discharged to Dredger Cut meet Title 22 tertiary requirements, or equivalent, the total mass loading of these constituents will increase10 percent from the current discharge. Receiving water levels have been measured at several locations and collected since 1997. Water quality modeling (*Water Quality Impact Report, White Slough Water Pollution Control Facility*, October 1998, Litton and Nikaido) based on 13 sampling runs at 25 different monitoring locations (a total of 325 samples) predicted DO levels in the terminus of Dredger Cut (Monitoring Location RSW-1, located approximately 1000 feet from the effluent discharge) above 5 mg/L for every simulation performed at 8.5 mgd with weekly average BOD_5 loading up to 1021 lbs/day. Analytical monitoring samples results obtained from February 2005, through December 2006, indicate the maximum weekly average BOD_5 loading corresponding to a flow of 8.5 mgd is 807 lbs/day, which is below the

modeling BOD loading maximum. Thus, this increase should not have adverse affects on the beneficial uses of the receiving water.

iv) **Salinity.** For constituents that are indicative of the salinity of the water (e.g. TDS, chloride, sulfate, and EC) this Order allows an increase in the mass loading of these constituents. However, this Order requires the Discharger implement best practicable treatment or control (BPTC) of its discharge in accordance with Resolution 68-16. For this discharge, the Regional Water Board finds that limiting effluent salinity to an increment of 500 µmhos/cm over the salinity of the municipal water supply meets BPTC. Therefore, this Order includes an effluent limitation of 780 µmhos/cm for EC, based on the municipal water supply EC plus an increment of 500 µmhos/cm. This Order also requires the Discharger to implement salinity reduction measures to reduce the salinity in its discharge to the Dredger Cut. Specifically, Special Provision VI.C.3.b. of this Order requires the Discharger to prepare and implement a Salinity Evaluation and Minimization Plan and to report on its progress in reducing salinity discharges to Dredger Cut.

The accommodation of the development, as set forth in the federal antidegradation policy and in the Water Code (see Water code section 13241(e)), justifies lowering of receiving water quality. In this case, however, the Order authorizes very minimal, if any lowering of receiving water quality given the technology-based standards and more stringent water quality based standards required by this Order.

Table F-11. Antidegradation Analysis

Constituent[1]	Water Quality Criteria/ Objective	Receiving Water Average Data Values	7.0 MGD Existing Effluent Concentration			8.5 MGD Projected Concentrations			Mass Loading Results		Effluent Limits
			Max Conc (ug/L)	Avg Data Values	Avg Mass Loading (lbs/day)	Max Conc (ug/L)	Avg Data Values	Avg Mass Loading (lbs/day)	Inc (+) or Dec (-) (lbs/day)	Inc (+) or Dec (-) (%)	
Inorganics											
Aluminum	87	222	200	59	3.44	155	59	4.18	0.74	21 %	Yes
Arsenic	10	4	3.8	2.97	0.17	3.8	2.97	0.21	0.04	21 %	--
Copper	8.6	4	3.21	3.74	0.22	3.21	3.74	0.27	0.05	21 %	--
Iron	300	384	130	120	7.01	130	120	8.51	1.50	21 %	--
Mercury	0.05	0.005	--	--	0.0007	--	--	0.00070	0.00	0 %	--
Manganese	50	28	38.3	28.68	1.67	38.3	28.68	2.03	0.36	21 %	Yes
Molybdenum	10		7.2	5.37	0.31	7.2	5.37	0.38	0.07	21 %	--
Zinc	100	17	69	39.31	2.29	69	39.31	2.79	0.49	21 %	--
Organics											
Bromoform	4.3	Non Detect	1.7	0.25	0.01	1.7	0.25	0.018	0.003	21 %	--
Chloroform	80	Non Detect	4.5	0.53	0.03	4.5	0.53	0.038	0.007	21 %	--
Dibromochloromethane[2]	0.41	Non Detect	1.1	1.1	0.06	0.82	ND	ND	-0.06	-100 %	Yes
Dichlorobromomethane[2]	0.56	Non Detect	1.2	1.2	0.07	1.1	ND	ND	-0.07	-100 %	Yes
Total THMs (calculated)		--	8.5	1.14	0.07	8.5	1.14	0.081	0.014	21 %	--
MtBE	5	2	0.3	0.3	0.02	0.3	0.3	0.021	0.004	21 %	--
Pesticides and PCBs	All Non-detects										
Other Compounds (mg/L)											
Chloride	230	14	77	64	3736	77	64	4537	801	21 %	--
EC (umhos/cm)	700	198	770	625	--	--	750	--	--	--	Yes
Sulfate	250	10	30	23	1343	30	23	1630	288	21 %	--
Oxygen Demanding Substances (mg/L)											
BOD			14	4	234	20	3.7	262	28	12 %	Yes
Total Suspended Solids			20	2.2	129	20	2.2	156	27	21 %	Yes
Total Dissolved Solids	450	127	540	365	21321	540	365	25890	4569	21 %	--
Ammonia (as N)	2.08	Nondetect	25	2.1	123	4.3	1.6	113	-10	-8%	Yes
Nitrate (as N)	10		11	8.8	514	10	5.9	419	-95	-18 %	Yes
Nitrite (as N)	1		9	3	175	1	<1	71	-104	-59 %	Yes
Phosphorus, Total (as P)			1.2	0.43	25	1.2	0.43	31	5.4	21 %	--

1. Over 200 constituents were included in this analysis. Only those constituents that were detected in the effluent discharge are shown in this summary; all others either indicated a decrease in mass loading or lacked monitoring results for the period of February 2005 through August 2006.
2. Constituent was only detected in one sample.

b. **Groundwater.** The Discharger utilizes storage ponds and reuses municipal and industrial wastewater for irrigation of the Agricultural Fields. As previously stated, this Order authorizes an increase in the total discharge; however, this Order requires the Discharger to limit the hydraulic, total nitrogen, and BOD loadings to the extent of the plant uptake to assure that pollution or nuisance will not occur. This Order also requires the Discharger to comply with groundwater limits for certain pollutants of concern (see Section V.B. Groundwater Limitations) for protection of the beneficial uses of the groundwater and to ensure that degradation does not occur. Furthermore, this Order requires a groundwater characterization study and requires the Discharger to evaluate BPTC if the groundwater monitoring results show that the discharge of waste is threatening to cause or has caused groundwater to contain waste constituents in concentrations statistically greater than background water quality.

E. Interim Effluent Limitations

1. **Aluminum, Ammonia, Chlorodibromomethane, and Dichlorobromomethane.** The SIP, section 2.2.1, requires that if a compliance schedule is granted for a CTR or NTR constituent, the Regional Water Board shall establish interim requirements and dates for their achievement in the NPDES permit. The interim limitations must be based on current treatment plant performance or existing permit limitations, whichever is more stringent. The State Water Board has held that the SIP may be used as guidance for non-CTR constituents. Therefore, the SIP requirement for interim effluent limitations has been applied to both CTR and non-CTR constituents in this Order.

   The interim limitations for aluminum, ammonia, chlorodibromomethane, and dichlorobromomethane in this Order are based on the current treatment plant performance. In developing the interim limitation, where there are ten sampling data points or more, sampling and laboratory variability is accounted for by establishing interim limits that are based on normally distributed data where 99.9% of the data points will lie within 3.3 standard deviations of the mean (*Basic Statistical Methods for Engineers and Scientists, Kennedy and Neville, Harper and Row*). Therefore, the interim limitations in this Order are established as the mean plus 3.3 standard deviations of the available data. In situations where the observed maximum effluent concentration (MEC) exceeds the 99.9%, the MEC is used as the interim limit.

   When there are less than ten sampling data points available, the *Technical Support Document for Water Quality- Based Toxics Control* ((EPA/505/2-90-001), TSD) recommends a coefficient of variation of 0.6 be utilized as representative of wastewater effluent sampling. The TSD recognizes that a minimum of ten data points is necessary to conduct a valid statistical analysis. The multipliers contained in Table 5-2 of the TSD are used to determine a maximum daily limitation based on a long-term average objective. In this case, the long-term average objective is to maintain, at a minimum, the current plant performance level. Therefore, when there are less than ten sampling points for a constituent, interim limitations are based on 3.11 times the maximum observed effluent concentration to obtain the daily maximum interim limitation (TSD, Table 5-2).

   The Regional Water Board finds that the Discharger can undertake source control and treatment plant measures to maintain compliance with the interim limitations included in this Order. Interim limitations are established when compliance with effluent limitations cannot be achieved by the existing discharge. Discharge of constituents in concentrations in excess of the final effluent limitations, but in compliance with the interim effluent limitations, can significantly degrade water quality and adversely affect the beneficial uses of the receiving stream on a long-term basis. The interim limitations, however, establish an enforceable ceiling concentration until compliance with the effluent limitation can be achieved.

   Table F-12 summarizes the calculations of the interim effluent limitations for aluminum, ammonia, chlorodibromomethane, and dichlorobromomethane:

Table F-12. Interim Effluent Limitation Calculation Summary

Parameter	MEC	Mean	Std. Dev.	# of Samples	Interim Limitation
Aluminum	200	59	50	10	224
Ammonia	25	0.99	2.5	1093	25
Chlorodibromomethane[1]	1.1	--	--	14	3.4
Dichlorobromomethane[1]	1.2	--	--	14	3.7

[1] Analytical monitoring results indicated one detected value only

2. **Mercury.** See Section IV.C.3.o. for the rationale for the interim limitations for mercury.

F. Land Discharge Specifications – Discharge Points 003

1. **Scope and Authority** Discharge of wastewater to land, and the operation of treatment and/or storage ponds, associated with the Facility can be allowed without requiring compliance with Title 27 regulations only if 1) the discharge is regulated by Waste Discharge Requirements, 2) any groundwater degradation complies with the Basin Plan and Resolution No. 68-16 (Antidegradation Policy), and 3) it does not violate water quality objectives.

   Title 27 contains regulations to address certain discharges to land. Title 27 establishes a waste classification system, specifies siting and construction standards for containment of classified waste, and requires extensive monitoring of groundwater. Generally, no degradation of groundwater quality by any waste constituent is acceptable under Title 27 regulations. However, some discharges to land are conditionally exempt from Title 27 regulations.

   Municipal sewage can be treated and controlled to a degree that will not result in unreasonable degradation of groundwater, and for this reason, treated municipal effluent has been conditionally exempted from Title 27. The remaining sources of wastewater (e.g. untreated industrial effluent, biosolids supernatant, DAF subnatant, stormwater runoff, return tailwater flows, and biosolids) are regulated by the Waste Discharge Requirements in this Order, including but not limited to Land Discharge Specifications IV.B.1. through B.4. Therefore, the following Land Discharge Specifications are necessary to consider the total wastewater discharge to land exempt from Title 27 under Section 20090(a), including the treatment and storage ponds associated with the Facility.

2. **Land Discharge Specifications – Discharge Points 003**
   Groundwater is generally encountered at approximately four to thirteen feet below the ground surface, and the groundwater flow direction is generally toward the east. However, groundwater elevations along the eastern perimeter of the Facility fluctuate during irrigation season due local groundwater pumping. The Discharger's available groundwater monitoring data indicate that underlying groundwater concentration levels for EC, sodium, chloride, and nitrate are elevated in some areas within the Facility. However, additional information is needed to determine baseline (pre-discharge) groundwater quality beneath the Facility and the impacts to groundwater quality associated with the Facility (See Section VII.B.2.d. of this Fact Sheet). Nevertheless, based on the available groundwater data and the analysis of concentrations in the discharges that can migrate to groundwater (Tables F-14 and

F-15), this Order requires additional BPTCs to reduce the potential for groundwater impacts.

a. and b. **Hydraulic and Nitrogen Loading.** The Facility's impound and reuse areas are not ideal for land application of wastewater because of the shallow water table. The underlying principle of land application is to beneficially reuse wastewater and the plant nutrients that it contains. Under ideal circumstances, soils within the land application area provide a matrix for biodegradation of the organic components of the wastewater (measured as BOD), create conditions conducive for transformation of organic nitrogen to plant available nitrate, create conditions conducive for denitrifying excess nitrate so that it does not percolate to the water table, provide pH buffering, and attenuate inorganic waste components (salts and metals).

Waste applications must be balanced to provide adequate plant nutrients and water while minimizing nuisance potential and percolation of waste constituents to the water table. The chemical and biological reactions that take place are interrelated and require that constituent loadings and wetting and drying cycles be optimized. As in this case, when the depth of the unsaturated (vadose) zone is less than several feet, the zone in which most of the treatment and attenuation occurs is limited. Thus this Order requires the Discharger to apply wastewater, and biosolids slurry when applicable, at reasonable agronomic rates.

c. **BOD_5.** As previously explained, under ideal circumstances, soils within the land application area provide a matrix for biodegradation of the organic components of the wastewater, which is measured as BOD. BOD is associated with both suspended solids and dissolved organic material. The BOD associated with suspended solids will remain close to the surface where the soil organisms have access to atmospheric oxygen to break the material down. The BOD in the dissolved organic material will percolate through the unsaturated zone of the soil and, under aerobic conditions, be removed during percolation. If the loading is too great, the soil will become anaerobic, and the crop and treatment process will fail.

In the past, the Discharger has not measured BOD_5 in the irrigation water; but instead, has obtained separate monitoring samples to measure BOD_5 in the municipal effluent and the industrial influent, which accounts for most of the BOD in the irrigation water. Thus, the estimated average annual BOD loadings in Table F-17 below were calculated from these weekly analytical monitoring results obtained during the years 2000 through 2005, the municipal effluent flow to the ponds, and the industrial influent flow. As indicated in Table F-17, the majority of the BOD loading is from industrial influent, which is primarily comprised of PCP cannery waste. USEPA guidelines, *Pollution Abatement in the Fruit and Vegetable Industry*, July 1977, states "*aerobic conditions can be maintained by intermittent application of the allowable amount of waste,"* and *"a day of application followed by several days of rest . ."* In this guideline, USEPA recommends a maximum BOD loading to a well aerated soil of 100 lbs/acre/day as a seasonal average. Because the majority of BOD loading to The Agricultural Fields is associated with cannery waste, this Order contains a maximum BOD

loading limit of 100 lbs/acre/day as a cycle average based on these recommended guidelines. Additionally, this Order includes a narrative limit to ensure protection of ground water.

Table F-13. Estimated BOD Loading to The Agricultural Fields

Year	Average Annual Industrial BOD Loading (lb/acre/year)	Average Annual Municipal BOD Loading (lb/acre/year)
2000	8,119	23
2001	9,112	40
2002	4,607	48
2003	3,535	52
2004	2,997	50
2005	3,496	29

The Discharger was not previously required to obtain BOD_5 loading data per field, so this data is not available. This has resulted in uncertainty as to whether the Discharger can immediately comply with these newly imposed limits. Consequently, this Order allows the Discharger one growing season to collect data and to implement changes, if necessary, to comply with the BOD_5 loading limits for the discharges to land. The BOD_5 loading limits become effective on 1 April 2009.

d. **Metals.** These limits are the same as in the previous permit, and are based on Federal Regulations CFR Part 503.13.

3. **Secondary Treated Effluent Discharged to Ponds.**
This Order retains the secondary-level limits contained in the previous permit, to determine that the treatment system complies minimum level of effluent quality attainable by secondary treatment in terms of biochemical oxygen demand (BOD_5) and settleable solids for discharges to the Facility's storage ponds.

G. Reclamation Specifications – Discharge Points 002and 003

Treated municipal wastewater discharged for reclamation usage must meet the requirements of CCRs, Title 22. The Discharger discharges treated municipal wastewater to land through Discharge Point 003, and supplies tertiary-level treated reclamation water to Northern California Power Agency and San Joaquin County Vector Control District through Discharge Point 002. Therefore, this Order contains the following reclamation specifications requiring compliance with Title 22, Division 4, Chapter 3, Water Recycling Criteria.

1. **Reclamation Specification 1 through 3.** These specifications are based on Title 22, Division 4, Section 60301 et. seq.

2 **Reclamation Specification 4.** This specification is based on Title 22, Sections 6020l.230 and 60304 (Disinfected Tertiary Recycled Water). ..

V. RATIONALE FOR RECEIVING WATER LIMITATIONS

Basin Plan water quality objectives to protect the beneficial uses of surface water and groundwater include numeric objectives and narrative objectives, including objectives for chemical constituents, toxicity, and tastes and odors. The toxicity objective requires that surface water and groundwater be maintained free of toxic substances in concentrations that produce detrimental physiological responses in humans, plants, animals, or aquatic life. The chemical constituent objective requires that surface water and groundwater shall not contain chemical constituents in concentrations that adversely affect any beneficial use or that exceed the maximum contaminant levels (MCLs) in Title 22, CCR. The tastes and odors objective states that surface water and groundwater shall not contain taste- or odor-producing substances in concentrations that cause nuisance or adversely affect beneficial uses. The Basin Plan requires the application of the most stringent objective necessary to ensure that surface water and groundwater do not contain chemical constituents, toxic substances, radionuclides, or taste and odor producing substances in concentrations that adversely affect domestic drinking water supply, agricultural supply, or any other beneficial use.

A. Surface Water

1. CWA section 303(a-c), requires states to adopt water quality standards, including criteria where they are necessary to protect beneficial uses. The Regional Water Board adopted water quality criteria as water quality objectives in the Basin Plan. The Basin Plan states that "*[t]he numerical and narrative water quality objectives define the least stringent standards that the Regional Board will apply to regional waters in order to protect the beneficial uses*." The Basin Plan includes numeric and narrative water quality objectives for various beneficial uses and water bodies. This Order contains Receiving Surface Water Limitations based on the Basin Plan numerical and narrative water quality objectives for unionized ammonia, biostimulatory substances, chemical constituents, color, dissolved oxygen, floating material, oil and grease, pesticides, radioactivity, sediment, settleable material, suspended material, tastes and odors, and toxicity.

   Numeric Basin Plan objectives for bacteria, and dissolved oxygen are applicable to this discharge and have been incorporated as Receiving Surface Water Limitations. Rational for these numeric receiving surface water limitations are as follows:

   a. **Bacteria.** The Basin Plan includes a water quality objective that "*[I]n water designated for contact recreation (REC-1), the fecal coliform concentration based on a minimum of not less than five samples for any 30-day period shall not exceed a geometric mean of 200/100 ml, nor shall more than ten percent of the total number of samples taken during any 30-day period exceed 400/100 ml*." Numeric Receiving Water Limitations for bacteria are included in this Order and are based on the Basin Plan objective.

   b. **Biostimulatory Substances**. The Basin Plan includes a water quality objective that "*[W]ater shall not contain biostimulatory substances which promote aquatic growths in concentrations that cause nuisance or adversely affect beneficial*

uses." Receiving Water Limitations for biostimulatory substances are included in this Order and are based on the Basin Plan objective.

c. **Color**. The Basin Plan includes a water quality objective that "*[W]ater shall be free of discoloration that causes nuisance or adversely affects beneficial uses."* Receiving Water Limitations for color are included in this Order and are based on the Basin Plan objective.

d. **Chemical Constituents**. The Basin Plan includes a water quality objective that *"[W]aters shall not contain chemical constituents in concentrations that adversely affect beneficial uses."* Receiving Water Limitations for chemical constituents are included in this Order and are based on the Basin Plan objective.

e. **Dissolved Oxygen.** The Basin Plan includes a water quality objective that "*[W]ithin the legal boundaries of the Delta, the dissolved oxygen concentrations shall not be reduced below 6.0 mg/L in the San Joaquin River (between Turner Cut and Stockton, 1 September through 30 November); and 5.0 mg/L in all other Delta waters except those bodies of water which are constructed for special purposes and from which fish have been excluded or where the fishery is not important as a beneficial use*." Numeric Receiving Water Limitations for dissolved oxygen are included in this Order and are based on the Basin Plan objective.

f. **Floating Material**. The Basin Plan includes a water quality objective that *"[W]ater shall not contain floating material in amounts that cause nuisance or adversely affect beneficial uses."* Receiving Water Limitations for floating material are included in this Order and are based on the Basin Plan objective.

g. **Pesticides**. The Basin Plan includes a water quality objective for pesticides beginning on page III-6.00. Receiving Water Limitations for pesticides are included in this Order and are based on the Basin Plan objective.

h. **pH.** The Basin Plan includes water quality objective that *"[T]he pH shall not be depressed below 6.5 nor raised above 8.5. Changes in normal ambient pH levels shall not exceed 0.5 in fresh waters with designated COLD or WARM beneficial uses*" As discussed in section IV.D.3., above, this Order does not apply the 0.5 pH change due to no upstream flow.

i. **Radioactivity**. The Basin Plan includes a water quality objective that *"[R]adionuclides shall not be present in concentrations that are harmful to human, plant, animal or aquatic life nor that result in the accumulation of radionuclides in the food web to an extent that presents a hazard to human, plant, animal or aquatic life."* The Basin Plan states further that *"[A]t a minimum, waters designated for use as domestic or municipal supply (MUN) shall not contain concentrations of radionuclides in excess of the maximum contaminant levels (MCLs) specified in Table 4 (MCL Radioactivity) of Section 64443 of Title 22 of the California Code of Regulations…"* Receiving Water Limitations for radioactivity are included in this Order and are based on the Basin Plan objective.

j. **Sediment.** The Basin Plan includes a water quality objective that *"[T]he suspended sediment load and suspended sediment discharge rate of surface waters shall not be altered in such a manner as to cause nuisance or adversely affect beneficial uses"* Receiving Water Limitations for suspended sediments are included in this Order and are based on the Basin Plan objective.

k. **Settleable Material.** The Basin Plan includes a water quality objective that *"[W]aters shall not contain substances in concentrations that result in the deposition of material that causes nuisance or adversely affects beneficial uses."* Receiving Water Limitations for settleable material are included in this Order and are based on the Basin Plan objective.

l. **Suspended Material.** The Basin Plan includes a water quality objective that *"[W]aters shall not contain suspended material in concentrations that cause nuisance or adversely affect beneficial uses."* Receiving Water Limitations for suspended material are included in this Order and are based on the Basin Plan objective.

m. **Taste and Odors**. The Basin Plan includes a water quality objective that *"[W]ater shall not contain taste- or odor-producing substances in concentrations that impart undesirable tastes or odors to domestic or municipal water supplies or to fish flesh or other edible products of aquatic origin, or that cause nuisance, or otherwise adversely affect beneficial uses."* Receiving Water Limitations for taste- or odor-producing substances are included in this Order and are based on the Basin Plan objective.

n. **Toxicity**. The Basin Plan includes a water quality objective that *"[A]ll waters shall be maintained free of toxic substances in concentrations that produce detrimental physiological responses in human, plant, animal, or aquatic life."* Receiving Water Limitations for toxicity are included in this Order and are based on the Basin Plan objective.

B. Groundwater

1. The Regional Board is required, relative to the groundwater that may be affected by the discharge, to implement the Basin Plan and consider the beneficial uses to be protected along with the water quality objectives essential for that purpose. The beneficial uses of the underlying ground water are municipal and domestic supply, industrial service supply, industrial process supply, and agricultural supply.

2. Basin Plan water quality objectives include narrative objectives for chemical constituents, tastes and odors, and toxicity of groundwater. The toxicity objective requires that groundwater be maintained free of toxic substances in concentrations that produce detrimental physiological responses in humans, plants, animals, or aquatic life. The chemical constituent objective states groundwater shall not contain chemical constituents in concentrations that adversely affect any beneficial use. The tastes and odors objective prohibits taste- or odor-producing substances in concentrations that cause nuisance or adversely affect beneficial uses.

3. Water quality objectives define the least stringent limits that could apply as groundwater limitations except where natural background quality unaffected by the discharge already exceeds the objective. These groundwater limitations are required to protect the beneficial uses of the underlying groundwater, and are based on Basin Plan water quality objectives .

4. The level of groundwater quality is dependant upon background conditions. Groundwater monitoring has been conducted at the Facility, but the site's groundwater quality is highly variable due to the complexities of regional and local influences, as well as the Facility's land application practices. Therefore, this Order requires the Discharger to characterize background groundwater quality to determine whether the discharge degrades groundwater below water quality objectives (See Provision VI.2.c.d.). Upon completion of this study, this Order requires the Discharger to evaluate BPTC if the groundwater monitoring results show that the discharge of waste is threatening to cause or has caused groundwater to contain waste constituents in concentrations statistically greater than background water quality.

VI. RATIONALE FOR MONITORING AND REPORTING REQUIREMENTS

Section 122.48 requires that all NPDES permits specify requirements for recording and reporting monitoring results. Water Code sections 13267 and 13383 authorizes the Regional Water Board to require technical and monitoring reports. The Monitoring and Reporting Program (MRP), Attachment E of this Order, establishes monitoring and reporting requirements to implement federal and state requirements. The following provides the rationale for the monitoring and reporting requirements contained in the MRP for this facility.

A. Influent Monitoring (MRP, Section III)

1. Influent monitoring is required to collect data on the characteristics of the wastewater and to assess compliance with effluent limitations (*e.g.*, BOD and TSS reduction requirements).

B. Effluent Monitoring (MRP, Section IV)

1. Pursuant to the requirements of CFR §122.44(i)(2) effluent monitoring is required for all constituents with effluent limitations. Effluent monitoring is necessary to assess compliance with effluent limitations, assess the effectiveness of the treatment process, and to assess the impacts of the discharge on the receiving stream and groundwater.

2. The SIP states that if "…*all reported detection limits of the pollutant in the effluent are greater than or equal to the C* [water quality criterion or objective] *value, the RWQCB* [Regional Water Board] *shall establish interim requirements…that require additional monitoring for the pollutant….*" All reported detection limits for dichlorobromomethane, and dibromochloromethane are greater than or equal to

corresponding applicable water quality criteria or objectives. Monitoring for these constituents has been included in this Order in accordance with the SIP.

C. Whole Effluent Toxicity Testing Requirements (MRP, Section V)

1. **Acute Toxicity.** Weekly 96-hour bioassay testing is required to demonstrate compliance with the effluent limitation for acute toxicity.

2. **Chronic Toxicity.** Quarterly chronic whole effluent toxicity testing is required in order to demonstrate compliance with the Basin Plan's narrative toxicity objective.

D. Receiving Water Monitoring (MRP, Section VIII)

1. **Surface Water**

   a. Receiving water monitoring is necessary to assess compliance with receiving water limitations and to assess the impacts of the discharge on the receiving stream.

2. **Groundwater**

   a. Section 13267 of the California Water Code states, in part, *"(a) A Regional Water Board, in establishing…waste discharge requirements… may investigate the quality of any waters of the state within its region*" and *"(b) (1) In conducting an investigation…, the Regional Water Board may require that any person who… discharges… waste…that could affect the quality of waters within its region shall furnish, under penalty of perjury, technical or monitoring program reports which the Regional Water Board requires. The burden, including costs, of these reports shall bear a reasonable relationship to the need for the report and the benefits to be obtained from the reports*." In requiring those reports, the Regional Water Board shall provide the person with a written explanation with regard to the need for the reports, and shall identify the evidence that supports requiring that person to provide the reports. The Monitoring and Reporting Program (Attachment E) is issued pursuant to California Water Code Section 13267.

   b. The groundwater monitoring and reporting program required by this Order and the Monitoring and Reporting Program are necessary to assure compliance with the waste discharge requirements and to fully characterize:
      - All waste constituents to be discharged;
      - The background quality of the uppermost layer of the uppermost aquifer;
      - The background quality of other waters that may be affected;
      - The underlying hydrogeologic conditions;
      - Waste treatment and control measures;
      - How treatment and control measures are justified as best practicable treatment and control;
      - The extent the discharge will impact the quality of each aquifer; and
      - The expected degree of degradation below water quality objectives.

c. Monitoring of the groundwater must be conducted to determine if the discharge has caused an increase in constituent concentrations, when compared to background. The monitoring must, at a minimum, require a complete assessment of groundwater impacts including the vertical and lateral extent of degradation, an assessment of all wastewater-related constituents which may have migrated to groundwater, an analysis of whether additional or different methods of treatment or control of the discharge are necessary to provide best practicable treatment or control to comply with Resolution No. 68-16. Economic analysis is only one of many factors considered in determining best practicable treatment or control. If monitoring indicates that the discharge has incrementally increased constituent concentrations in groundwater above background, this permit may be reopened and modified. Until groundwater monitoring is sufficient, this Order contains Groundwater Limitations that allow groundwater quality to be degraded for certain constituents when compared to background groundwater quality, but not to exceed water quality objectives. If groundwater quality has been degraded by the discharge, the incremental change in pollutant concentration (when compared with background) may not be increased. If groundwater quality has been or may be degraded by the discharge, this Order may be reopened and specific numeric limitations established consistent with Resolution 68-16 and the Basin Plan.

d. This Order requires the Discharger to continue groundwater monitoring and includes a regular schedule of groundwater monitoring in the attached Monitoring and Reporting Program. The groundwater monitoring reports are necessary to evaluate impacts to waters of the State to assure protection of beneficial uses and compliance with Regional Board plans and policies, including Resolution 68-16. Evidence in the record includes effluent monitoring data that indicates the presence of constituents that may degrade groundwater and surface water.

E. Other Monitoring Requirements

1. **Discharges to Land – Monitoring Location LND-001 (MRP, Section VI).** Certain aspects of the Discharger's waste treatment and control practices have not been justified as BPTC. For irrigation waters, the Discharger mixes treated municipal wastewater, treatment process systems' waste (e.g. DAF subnatant and Biosolids supernatant), with untreated wastewater flows from the industrial line, and sometimes biosolids. This mixture is distributed to The Agricultural Fields via furrow irrigation (row crops) or border check (field crops), which is not capable of evenly distributing the mixture. Waste applications must be applied such that the crops and soils filter, remediate, and absorb the pollutant loadings to prevent migration to underlying groundwater (as documented in the Discharger's 2001 Wastewater Master Plan); consequently this practice may not be justified as BPTC. The Discharger has not fully characterized the untreated wastewater from the industrial line. Therefore, this Order requires the Discharger to monitor the irrigation waters and conduct field inspections

2. **Reclamation Monitoring – Monitoring Location EFF-001 (MRP, Section VII. A.).** Reclamation monitoring is necessary to assess compliance with Title 22, California Code of Regulations, Section 60301, et. seq.

3. **Reclamation Monitoring – Wastewater in Storage Ponds Monitoring Locations PND-001 through PND-004 (MRP, Section VII.B.).** The storage of wastewater in the Discharger's unlined ponds does not appear to meet BPTC. A frequently implemented control method is to store wastewater in High Density Polyethlyene lined ponds to prevent pollutants in the impounded discharge from migrating to groundwater. These unlined ponds may pose a threat to polluting the underlying groundwater. Evidence in the record includes the Discharger's 2006 Groundwater Investigation Report, *Water Pollution Control Facility Existing Conditions Report,* which reported sources and pollutant concentrations that may have caused elevated pollutant concentrations in the underlying groundwater as indicated by down-gradient monitoring wells analytical results. Another possible deficient BPTC is the Discharger's lack of full denitrification treatment, which may be attributed to the significant nitrate concentrations in the underlying groundwater. Therefore this Order requires the Discharger to monitor wastewater in the ponds and includes a regular schedule discharge monitoring in the attached Monitoring and Reporting Program. The monitoring reports are necessary to assess degradation of the water quality of the underlying groundwater, to determine the most appropriate BPTC, and to derive appropriate numerical groundwater quality objectives for the Facility that are consistent with the Basin Plan.

   The additional pond monitoring (i.e. DO, pH, Freeboard, and Available Storage Volume) are required to ensure compliance with Section 13050(m) of the California Water Code.

4. **Municipal Water Supply Monitoring (MRP, Section IX.A)**
   Water supply monitoring is required to evaluate the source of constituents in the wastewater.

VII. RATIONALE FOR PROVISIONS

A. Standard Provisions

Standard Provisions, which apply to all NPDES permits in accordance with section 122.41, and additional conditions applicable to specified categories of permits in accordance with section 122.42, are provided in Attachment D. The discharger must comply with all standard provisions and with those additional conditions that are applicable under section 122.42.

Section 122.41(a)(1) and (b) through (n) establish conditions that apply to all State-issued NPDES permits. These conditions must be incorporated into the permits either expressly or by reference. If incorporated by reference, a specific citation to the regulations must be included in the Order. Section 123.25(a)(12) allows the state to omit or modify conditions to impose more stringent requirements. In accordance with section 123.25, this Order omits federal conditions that address enforcement authority

specified in sections 122.41(j)(5) and (k)(2) because the enforcement authority under the Water Code is more stringent. In lieu of these conditions, this Order incorporates by reference Water Code section 13387(e).

B. Special Provisions (Section VI.C.)

1. **Reopener Provisions**

a. **Special Provisions VI.C.1.b.** These provisions are based on CFR Part 123 and allow future modification of this Order and its effluent limitations as necessary in response to updated WQOs that may be established in the future.

b. **Mercury (Special Provisions VI.C.1.c.)** This provision allows the Regional Water board to reopen this Order in the event mercury is found to be causing toxicity based on acute or chronic toxicity test results, or if a TMDL program is adopted. In addition, this Order may be reopened if the Regional Water Board determines that a mercury offset program is feasible for dischargers subject to NPDES permits.

c. **Whole Effluent Toxicity (Special Provisions VI.C.1.d.)** This Order requires the Discharger to investigate the causes of, and identify corrective actions to reduce or eliminate effluent toxicity through a Toxicity Reduction Evaluation (TRE). This Order may be reopened to include a numeric chronic toxicity limitation, a new acute toxicity limitation, and/or a limitation for a specific toxicant identified in the TRE. Additionally, if a numeric chronic toxicity water quality objective is adopted by the State Water Board, this Order may be reopened to include a numeric chronic toxicity limitation based on that objective.

d. **Water Effects Ratio (WER) and Metal Translators (Special Provisions VI.C.1.e.)** A default WER of 1.0 has been used in this Order for calculating water quality criteria for applicable inorganic constituents. This Order allows the Discharger to perform studies to determine site-specific WERs and/or dissolved-to-total metal translators. Accordingly, this provision allows the Regional Water Board to reopen this Order to modify the applicable effluent limitations in the event that the Discharger conducts and completes these studies.

e. **Temperature Study (Special Provisions VI.C.1.f.)** The Discharger's tertiary-treated effluent is discharged into the upstream-end of Dredger Cut, a dead-end slough that receives flow only from stormwater or agricultural runoff. This Order does not contain temperature effluent or receiving water limits because the Thermal Plan is applied using ambient upstream receiving water conditions. However, this Order does require the Discharger to conduct a temperature study to determine appropriate effluent limitations for the protection of the beneficial uses of the receiving water. Accordingly, this provision allows the Regional Water Board to reopen this Order to add to, or modify, temperature effluent limitations in this permit.

f. **Industrial Influent Characterization Study (Special Provisions VI.C.1.g.)** The Discharger collects industrial wastewater for direct discharge to The Agricultural Fields. As further discussed in section VI.B.2.c. of this Fact Sheet,

this Order requires the Discharger to conduct year-round investigation(s) of the industrial wastewater stream. Accordingly, this provision allows the Regional Water Board to reopen this Order to modify, or add, effluent limitations or requirements in the event that this study indicates that the industrial discharge contains pollutants in concentrations that may negatively impact groundwater quality.

g. **Background Groundwater Assessment (Special Provisions VI.C.1.h.)** To date, the Discharger has installed 19 groundwater monitoring wells, and has collected data since 1989; however, because of the difficulty in discerning the regional and local influences from the site-specific source impacts, additional monitoring wells and subsequent information are needed to determine background (or baseline) groundwater quality unaffected by the discharge. This Order requires the Discharger to continue, but finalize, its background groundwater quality assessment. Accordingly, this provision allows the Regional Water Board to reopen this Order to include groundwater limitations for specific constituents based on the Basin Plan's groundwater water quality objectives or the baseline values determined from this study.

h. **Title 22 Engineering Report (Special Provisions VI.C.1.i.)** The Discharger is a producer of reclamation waters (see Section II of this Fact Sheet). As further discussed in section VI.B.2.e. of this Fact Sheet, this Order requires the Discharger to prepare a Title 22 Engineering Report that reflects its current reclamation uses and operations, and to submit the report to DHS and to the Executive Officer for approval. Accordingly, this provision allows the Regional Water Board to reopen this Order to modify, or add, limitations (e.g. effluent or groundwater) in the event that the report indicates that the Facility's operations, or reclamation uses, may pose threat to public or may negatively impact water quality (surface water or groundwater).

i. **Mixing Zone Study (Special Provisions VI.C.1.j).** Section 1.4.2 of the SIP allows the Regional Water Board to grant dilution credit when the Discharger has demonstrated through studies to the Regional Water Board that the credit is appropriate. This Order allows the Discharger to perform receiving water mixing zone studies to evaluate any available assimilative capacity in Dredger Cut. Accordingly, this provision allows the Regional Water Board to reopen this Order to modify the applicable effluent limitations in the event that the Discharger demonstrates to the satisfaction of the Regional Water Board that a dilution credit is appropriate.

j. **Assessment of Salmonids and Early Fish Life Stages in White Slough (Special Provisions VI.C.1.k.).** The receiving water, Dredger Cut, is a tributary to White Slough, The ammonia limits in this Order were calculated based on the documented presence of salmonids in White Slough. This provision allows the Regional Water Board to reopen this Order to modify the ammonia effluent limits should the National Oceanic and Atmospheric Administration (NOAA) submit a determination to the Regional Water Board that the habitat of White Slough is not suitable for salmonid species.

k. **Land Discharge Organic Loading Study**. This Order requires the Discharger to conduct an Organic Loading Study. This study is necessary to determine compliance with Prohibition III.B and to determine the appropriate maximum daily BOD loading limit. This provision allows the Regional Water Board to reopen this Order to modify the land discharge specifications or include additional requirements.

l. **Pond Freeboard Evaluation Study**. This Order requires the Discharger to conduct an evaluation of the stability of the pond berms and the necessity, or not, for maintaining a pond freeboard. This study is necessary to determine whether a freeboard less than 2-feet may pose a threat for overtopping or berm failure. This provision allows the Regional Water Board to reopen this Order to modify the pond operating requirements.

m. **Wintertime Irrigation Management Plan**. This Order requires the Discharger to develop a wintertime irrigation management plan to minimize or reduce water quality impacts in the even the agricultural fields are inundated during a 100-year flood and requires the Discharger to evaluate current design controls and land management practices. This provision allows the Regional Water Board to reopen this Order to modify the land discharge specifications, or include additional requirements and prohibitions.

2. **Special Studies and Additional Monitoring Requirements**

a. **Chronic Whole Effluent Toxicity Requirements.** The Basin Plan contains a narrative toxicity objective that states, "*All waters shall be maintained free of toxic substances in concentrations that produce detrimental physiological responses in human, plant, animal, or aquatic life.*" (Basin Plan at III-8.00.) Based on monthly whole effluent chronic toxicity testing performed by the Discharger from February 2005, through October 2005, the discharge has reasonable potential to cause or contribute to an to an in-stream excursion above of the Basin Plan's narrative toxicity objective.

This provision requires the Discharger to develop a Toxicity Reduction Evaluation (TRE) Work Plan in accordance with USEPA guidance. In addition, the provision provides a numeric toxicity monitoring trigger and requirements for accelerated monitoring, as well as, requirements for TRE initiation if a pattern of toxicity has been demonstrated.

Monitoring Trigger. A numeric toxicity monitoring trigger of > 1 TUc (where TUc = 100/NOEC) is applied in the provision, because this Order does not allow any dilution for the chronic condition. Therefore, a TRE is triggered when the effluent exhibits a pattern of toxicity at 100% effluent.

Accelerated Monitoring. The provision requires accelerated WET testing when a regular WET test result exceeds the monitoring trigger. The purpose of accelerated monitoring is to determine, in an expedient manner, whether there is a pattern of toxicity before requiring the implementation of a TRE. Due to possible seasonality of the toxicity, the accelerated monitoring should be

performed in a timely manner, preferably taking no more than 2 to 3 months to complete.

The provision requires accelerated monitoring consisting of four chronic toxicity tests every two weeks using the species that exhibited toxicity. Guidance regarding accelerated monitoring and TRE initiation is provided in the *Technical Support Document for Water Quality-based Toxics Control, EPA/505/2-90-001, March 1991* (TSD). The TSD at page 118 states, "EPA recommends if toxicity is repeatedly or periodically present at levels above effluent limits more than 20 percent of the time, a TRE should be required." Therefore, four accelerated monitoring tests are required in this provision. If no toxicity is demonstrated in the four accelerated tests, then it demonstrates that toxicity is not present at levels above the monitoring trigger more than 20 percent of the time (only 1 of 5 tests are toxic, including the initial test). However, notwithstanding the accelerated monitoring results, if there is adequate evidence of a pattern of effluent toxicity (i.e. toxicity present exceeding the monitoring trigger more than 20 percent of the time), the Executive Officer may require that the Discharger initiate a TRE.

See the WET Accelerated Monitoring Flow Chart, below, for further clarification of the accelerated monitoring requirements and for the decision points for determining the need for TRE initiation.

TRE Guidance. The Discharger is required to prepare a TRE Work Plan in accordance with USEPA guidance. Numerous guidance documents are available, as identified below:

- *Toxicity Reduction Evaluation Guidance for Municipal Wastewater Treatment Plants,* (EPA/833B-99/002), August 1999.

- Generalized Methodology for Conducting Industrial TREs*, (EPA/600/2-88/070), April 1989.*

- *Methods for Aquatic Toxicity Identification Evaluations: Phase I Toxicity Characterization Procedures,* Second Edition, EPA 600/6-91/005F, February 1991.

- *Toxicity Identification Evaluation: Characterization of Chronically Toxic Effluents, Phase I*, EPA 600/6-91/005F, May 1992.

- *Methods for Aquatic Toxicity Identification Evaluations: Phase II Toxicity Identification Procedures for Samples Exhibiting acute and Chronic Toxicity,* Second Edition, EPA 600/R-92/080, September 1993.

- *Methods for Aquatic Toxicity Identification Evaluations: Phase III Toxicity Confirmation Procedures for Samples Exhibiting Acute and Chronic Toxicity*, Second Edition, EPA 600/R-92/081, September 1993.

- *Methods for Measuring the Acute Toxicity of Effluents and Receiving Waters to Freshwater and Marine Organisms*, Fifth Edition, EPA-821-R-02-012, October 2002.

- *Short-term Methods for Estimating the Chronic Toxicity of Effluents and Receiving Waters to Freshwater Organisms*, Fourth Edition, EPA-821-R-02-013, October 2002.

- *Technical Support Document for Water Quality-based Toxics Control, EPA/505/2-90-001, March 1991*

WET Accelerated Monitoring Flow Chart

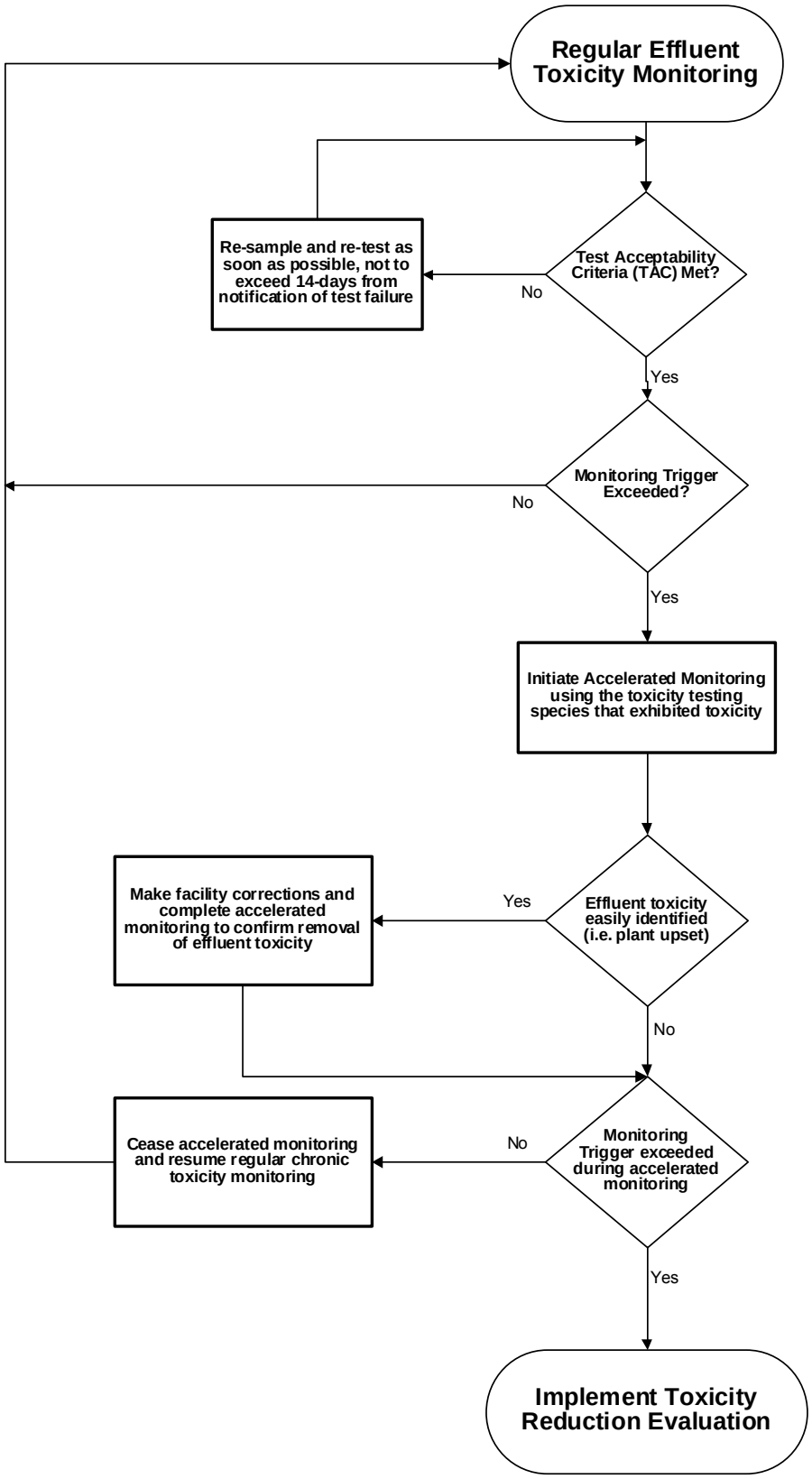

b. **Temperature Study.** The Thermal Plan specifies requirements for effluent and receiving water limitations based upon natural background receiving water temperatures. Since Discharge Point 001 is located within the dead-end terminus of Dredger Cut, it is not possible to measure background receiving water temperature. Therefore, this Order requires the Discharger to conduct a study to determine appropriate temperature controls to protect the beneficial uses of the receiving water. This provision is consistent with other permits with these same conditions that were previously adopted by the Regional Water Board, and is based upon State Water Board's recommendations (State Water Resources Control Board Order WQO. 2002-0015, adopted October 3, 2002).

c. **Industrial Influent Characterization Study.** The Discharger accepts industrial wastewater through a separate sewer collection system. The industrial wastewater does not flow to the Facility's treatment system. Instead, during the winter, the industrial wastewater is stored in the Facility's unlined ponds, and during the summer, is applied directly to The Agricultural Fields. A few industrial users are subject to metal finishing pretreatment standards. Metal finishing process wastewaters are generally "hazardous wastes" under the federal Resource Conservation and Recovery Act (RCRA). However, metal finishing process wastewaters discharging to municipal sewer systems are generally excluded from being regulated as hazardous waste, because they are mixed with municipal sewage that are treated through a publicly owned treatment works system (CFR Part 261.4). As a result, this industrial waste collection system does not qualify under this exclusion, and therefore, this study is necessary to assess whether the industrial waste stream can be legally discharged and to determine the potential impacts of the untreated waste on the underlying groundwater quality.

d. **Background Groundwater Quality and Groundwater Degradation Assessment Study.** The Discharger has been monitoring groundwater since 1989. The previous permit required the Discharger to continue groundwater monitoring, to install additional wells in order to conduct monitoring of the groundwater up-gradient and down-gradient of the Facility, and to submit a report regarding the adequacy of this monitoring. By April 2001, the Discharger had installed a total of 19 groundwater monitoring wells.

The Discharger's June 2003 report, *City of Lodi – Groundwater Monitoring Status Report,* concluded "*There is insufficient data to accurately define the background water quality of groundwater migrating to the City Property*." Based on these conclusions and analysis of the available data at that time, the report recommended 1) "*One or more additional monitoring wells . . . to the west or northwest of City Property to confirm the background concentration of nitrates migrating to the property*.", 2) "*An additional monitoring well . . . to the northeast of City Property to confirm groundwater flow direction and potentially downgradient water quality.*", and 3) "*A temporary monthly water quality monitoring program lasting twelve months . . . for all [19] monitoring wells currently operated by the City to validate some of the wide water quality swings seen on a quarterly basis.*"

In September 2006, the Discharger submitted another groundwater investigations report, *City of Lodi – Water Pollution Control Facility Existing Conditions Report,* summarizes "*it will be essential to identify the background conditions to determine compliance. Based on a review of the groundwater data and analyses performed by the City to date, background conditions have not been fully characterized.*" This report further recommends to install "*several additional monitoring wells*" and to conduct "*cone penetrometer testing (CPT)/Hydropunch testing . . . along three transects*."

Based on analysis of existing groundwater data, Regional Water Board staff concurs with the recommendations in these reports, and therefore, this provision is necessary to complete the background groundwater quality assessment and to determine any degradation of underlying groundwater by the Discharger's existing BPTC processes.

e. **Title 22 Engineering Report.** The State of California Water Recycling Criteria (adopted I December 2000) require the submission of an engineering report to the Regional Water Board and DHS before recycled water projects are implemented. The Discharger is a producer of reclamation waters as previously detailed in Section II of this Fact Sheet; yet to date, has not completed, nor submitted, an Engineering Report pursuant to Section 60323 of CCR, Title 22. This provision is necessary to comply with the Water Recycling Criteria of the CCR, Title 22.

f. **Effluent and Receiving Water Characterization Study.** An effluent and receiving water monitoring study is required to ensure adequate information is available for the next permit renewal.

g. **Land Discharge Organic Loading Study**. This Order requires the Discharger to conduct an Organic Loading Study. This study is necessary to determine compliance with Prohibition III.B and to determine the appropriate maximum daily BOD loading limit.

h. **Pond Freeboard Evaluation Study.** The Discharger has four onsite storage ponds that were originally designed to have a capacity of 110 million gallons. The Discharger's monthly monitoring reports indicated a maximum volume of approximately 97 million gallons in the ponds, and freeboard measurements below 2 feet. The ponds' berms are protected from erosion with geotextile/rock faces and paved tops, and if the ponds overtopped, the overflow would be contained on-site and collected by the Facility's tailwater system. This Order requires the Discharger to conduct a pond freeboard evaluation study. This study is necessary to evaluate the stability of pond berms, risk for undesirable reactions caused by pond overtopping or berm failure, and to determine an adequate freeboard that prevents such risks, including necessary BMPs that need to be implemented to prevent undesirable reactions.

3. **Best Management Practices and Pollution Prevention**

a. **Pollution Prevention Plan (PPP) for mercury.** A PPP for mercury is required in this Order per CWC section 13263.3(d)(1)(D) as part of the interim effluent limitation for mercury. The Discharger has requested an expansion; therefore, it may be necessary to provide source controls to limit the mass loading of mercury entering the facility to comply with the interim effluent limitations for mercury. The PPP shall be developed in conformance with CWC section 13263.3(d)(3) as outlined in subsection c., below.

b. **Salinity Evaluation and Minimization Plan.** The Discharger shall prepare a salinity evaluation and minimization plan to address sources of salinity from the Facility.

c. **CWC section 13263.3(d)(3) Pollution Prevention Plans.** The pollution prevention plans required for aluminum, chlorodibromomethane, and dichlorobromomethane shall, at minimum, meet the requirements outlined in CWC section 13263.3(d)(3). The minimum requirements for the pollution prevention plans include the following:

i. An estimate of all of the sources of a pollutant contributing, or potentially contributing, to the loadings of a pollutant in the treatment plant influent.

ii. An analysis of the methods that could be used to prevent the discharge of the pollutants into the Facility, including application of local limits to industrial or commercial dischargers regarding pollution prevention techniques, public education and outreach, or other innovative and alternative approaches to reduce discharges of the pollutant to the Facility. The analysis also shall identify sources, or potential sources, not within the ability or authority of the Discharger to control, such as pollutants in the potable water supply, airborne pollutants, pharmaceuticals, or pesticides, and estimate the magnitude of those sources, to the extent feasible.

iii. An estimate of load reductions that may be attained through the methods identified in subparagraph ii.

iv. A plan for monitoring the results of the pollution prevention program.

v. A description of the tasks, cost, and time required to investigate and implement various elements in the pollution prevention plan.

vi. A statement of the Discharger's pollution prevention goals and strategies, including priorities for short-term and long-term action, and a description of the Discharger's intended pollution prevention activities for the immediate future.

vii. A description of the Discharger's existing pollution prevention programs.

viii. An analysis, to the extent feasible, of any adverse environmental impacts, including cross-media impacts or substitute chemicals that may result from the implementation of the pollution prevention program.

ix. An analysis, to the extent feasible, of the costs and benefits that may be incurred to implement the pollution prevention program.

d. **Wintertime Irrigation Management Plan.** Approximately half of the Discharger's agricultural fields (as shown in Attachment C) are located within the 100-year flood plain and are not protected from inundation during a 100-year flood event. Winter crops are grown in these areas and may be irrigated with wastewater during the winter. Typically, land application areas are required to be protected from inundation during a 100-yr storm event. However, for several reasons, in this particular instance, the water quality risks are likely minimal. The western fields are bordered by levees on the west and cannot naturally drain to the Delta. Flooding would occur if they were overtopped, which has happened in the past, but the water sits on-site until it is processed through the tailwater system. The only "runoff" would be the volume of water that is higher than the elevation of the levees. In addition, biosolids are only applied to the corn fields, which are tilled in every year in the fall. Therefore, biosolids that had been applied during the previous irrigation season would be incorporated into the soil before there is a potential for a flooding event to occur. Finally, since flooding risk is always linked to high precipitation, there would be no need to irrigate. However, to reduce or prevent water quality impacts that can be caused by the flooding of the fields, this Order requires that the Discharger develop and implement a Wintertime Irrigation Management Plan to reduce the risk of water quality impacts in the event the fields are inundated.

4. **Construction, Operation, and Maintenance Specifications**

a. **Treatment Pond Operation Requirements.** Section 13050 of California Water Code (CWC) prohibits wastewater, either discharged or impounded, to create a nuisance. Anaerobic conditions (lacking oxygen) within ponds tend to produce aesthetically undesirable odors, and impounded waters improperly managed can breed mosquitoes. Furthermore, as previously disclosed, all ponds (except the sludge lagoon) at the Facility are unlined, so impounded wastewater may percolate to the underlying groundwater. Low pH values cause metals to dissolve, allowing them to percolate into the groundwater. Many metals are priority toxic pollutants, and when transported into groundwater, could elevate concentration levels and violate the Basin Plan's groundwater toxicity objective. Therefore, this provision is necessary to comply with CWC Section 13050.

5. **Special Provisions for Municipal Facilities (POTWs Only)**

a. **Pretreatment Requirements.**

i. CWA Section 307(b), and CFR Part 403, require publicly owned treatment works to develop an acceptable industrial pretreatment program. A pretreatment program is required to prevent the introduction of pollutants and prevent pass through of pollutants that exceed water quality objectives, standards or permit limitations. Pretreatment requirements are imposed pursuant to CFR Part 403.

ii. The Discharger shall implement and enforce its approved pretreatment program and is an enforceable condition of this Order. If the Discharger fails to perform the pretreatment functions, the Regional Water Board, the State Water Board or the USEPA may take enforcement actions against the Discharger as authorized by the CWA.

b. **Sludge/Biosolids Treatment or Disposal Specifications (Special Provisions VI.C.5.b and c.)** These provisions are necessary to comply with state regulations Title 27, CCR, Division 2, subdivision 1, section 20005, et seq. and federal regulations CFR Part 503 et seq.

c. **The Agricultural Fields' Area Specifications (Special Provisions VI.C.5.d.)** This provision requires the Discharger to implement best management practices with respect to land application and disposal, and is necessary to protect public health and safety.

d. **Collection System (Special Provisions VI.C.5.e.)** The Discharger's collection system is part of the treatment system that is subject to the Order 2006-0003, adopted by the State Water Board on May 2006. This Order is a Statewide General WDR for Sanitary Sewer Systems. Therefore, the Discharger shall be subject to the requirements of Order 2006-0003 and any future revisions thereto. Pursuant to federal regulations, the Discharger must properly operate and maintain its collection system [CFR Part 122.41(e)], report any non-compliance [CFR parts 122.41(l)(6) and (7)], and mitigate any discharge from the collection system in violation of this Order [CFR Part 122.41(d)].

6. **Other Special Provisions**

a. **Tertiary Treatment.** To protect public health and safety, the Discharger is to comply with DHS reclamation criteria, CCR Title 22, Division 4, Chapter 3, or equivalent.

b. To protect public health and safety, treatment and storage facilities shall be designed, constructed, operated, and maintained to prevent inundation or washout due to floods with a 100-year return frequency

c. **Ownership Change.** To maintain the accountability of the operation of the Facility, the Discharger is required to notify the succeeding owner or operator of the existence of this Order by letter if, and when, there is any change in control or ownership of land or waste discharge facilities presently owned or controlled by the Discharger.

7. **Compliance Schedules**

The use and location of compliances schedules in the permit depends on the Discharger's ability to comply and the source of the applied water quality criteria.

a. The Discharger submitted a request, and justification dated 1 February 2007, for a compliance schedule for aluminum, ammonia, chlorodibromomethane, and

dichlorobromomethane. The compliance schedule justification included all items specified in Paragraph 3, items (a) through (d), of Section 2.1 of the SIP. This Order establishes a compliance schedule for the new, final, water quality-based effluent limitations for aluminum, ammonia, chlordibromomethane, and dichlorobromomethane and requires full compliance not later than 18 May 2010.

b. **Phase 3 Improvements.** The Discharger has requested an expansion of allowable flows to be discharged to Dredger Cut. This provision is necessary to comply with the Antidegradation Policy; thus, the Discharger must comply with this provision (VI.C.7.b) before the permitted flow may be increased.

VIII. PUBLIC PARTICIPATION

The California Regional Water Quality Control Board, Central Valley Region (Regional Water Board) is considering the issuance of waste discharge requirements (WDRs) that will serve as a National Pollutant Discharge Elimination System (NPDES) permit for White Slough Water Pollution Control Facility. As a step in the WDR adoption process, the Regional Water Board staff has developed tentative WDRs. The Regional Water Board encourages public participation in the WDR adoption process.

A. Notification of Interested Parties

The Regional Water Board has notified the Discharger and interested agencies and persons of its intent to prescribe waste discharge requirements for the discharge and has provided them with an opportunity to submit their written comments and recommendations. Notification was provided through publication in the Lodi News Sentinel, posting at the Facility and the nearest Post Office.

B. Written Comments

The staff determinations are tentative. Interested persons are invited to submit written comments concerning these tentative WDRs. Comments must be submitted either in person or by mail to the Executive Office at the Regional Water Board at the address above on the cover page of this Order.

To be fully responded to by staff and considered by the Regional Water Board, written comments should be received at the Regional Water Board offices by noon on 17 August 2007.

C. Public Hearing

The Regional Water Board will hold a public hearing on the tentative WDRs during its regular Board meeting on the following date and time and at the following location:

Date: 13/14 September 2007
Time: 8:30 am
Location: City of Clovis Council Chambers
1033 Fifth Street
Clovis, CA 93612

Interested persons are invited to attend. At the public hearing, the Regional Water Board will hear testimony, if any, pertinent to the discharge, WDRs, and permit. Oral testimony will be heard; however, for accuracy of the record, important testimony should be in writing.

Please be aware that dates and venues may change. Our Web address is http://www.waterboards.ca.gov/rwqcb5/ where you can access the current agenda for changes in dates and locations.

D. Waste Discharge Requirements Petitions

Any aggrieved person may petition the State Water Resources Control Board to review the decision of the Regional Water Board regarding the final WDRs. The petition must be submitted within 30 days of the Regional Water Board's action to the following address:

State Water Resources Control Board
Office of Chief Counsel
P.O. Box 100, 1001 I Street
Sacramento, CA 95812-0100

E. Information and Copying

The Report of Waste Discharge (RWD), related documents, tentative effluent limitations and special provisions, comments received, and other information are on file and may be inspected at the address above at any time between 8:30 a.m. and 4:45 p.m., Monday through Friday. Copying of documents may be arranged through the Regional Water Board by calling Ms. Gayleen Perreira at (916) 464-4824 or Mr. James Marshall at (916) 464-4772.

F. Register of Interested Persons

Any person interested in being placed on the mailing list for information regarding the WDRs and NPDES permit should contact the Regional Water Board, reference this facility, and provide a name, address, and phone number.

G. Additional Information

Requests for additional information or questions regarding this order should be directed to Gayleen Perreira at (916) 464-4824.

ATTACHMENT G – Guidelines for Preparation of An Engineering Report for the Production, Distribution, and Use of Recycled Water

STATE OF CALIFORNIA-HEALTH AND HUMAN SERVICES AGENCY GRAY DAVIS, *GOVERNOR*

DEPARTMENT OF HEALTH SERVICES
DIVISION OF DRINKING WATER
RECYCLED WATER UNIT

GUIDELINES FOR THE PREPARATION OF AN ENGINEERING REPORT FOR THE PRODUCTION, DISTRIBUTION AND USE OF RECYCLED WATER

March 2001
(Replaces September 1997 Version)

1.0 INTRODUCTION

The current State of California Water Recycling Criteria (adopted in December 2000) require the submission of an engineering report to the California Regional Water Quality Control Board (RWQCB) and the Department of Health Services (DHS) before recycled water projects are implemented. These reports must also be amended prior to any modification to existing projects. The purpose of an engineering report is to describe the manner by which a project will comply with the Water Recycling Criteria. The Water Recycling Criteria are contained in Sections 60301 through 60355, inclusive, of the California Code of Regulations, Title 22. The Criteria prescribe:

* Recycled water quality and wastewater treatment requirements for the various types of allowed uses,

* Use area requirements pertaining to the actual location of use of the recycled water (including dual plumbed facilities), and

* Reliability features required in the treatment facilities to ensure safe performance.

Section 60323 of the Water Recycling Criteria specifies that the engineering report be prepared by a properly qualified engineer, registered in California and experienced in the field of wastewater treatment.

Recycled water projects vary in complexity. Therefore, reports will vary in content, and the detail presented will depend on the scope of the proposed project and the number and nature of the agencies involved in the production, distribution, and use of the recycled water. The report should contain sufficient information to assure the regulatory agencies that the degree and reliability of treatment is commensurate with the requirements for the proposed use, and that the distribution and use of the recycled water will not create a health hazard or nuisance.

The intent of these guidelines is to provide a framework to assist in developing a comprehensive report which addresses all necessary elements of a proposed or modified project. Such a report is necessary to allow for the required regulatory review and approval of a recycled water project.

References which may assist in addressing various project elements include:

- State of California Water Recycling Criteria (December 2000)
- State of California Regulations Relating to Cross-Connections
- California Waterworks Standards
- California Water Code
- Guidelines for the Distribution of Non-potable Water, (California-Nevada Section-AWWA, 1992)
- Guidelines For The On-Site Retrofit of Facilities Using Disinfected Tertiary Recycled Water (California-Nevada Section-AWWA, 1997)
- Manual of Cross-Connection Control/Procedures and Practices (DOHS)
- Ultraviolet Disinfection – Guidelines for Drinking Water and Water Reuse (NWRI/AWWARF, December 2000)

2.0 RECYCLED WATER

The following sections discuss the type of information that should be presented and described in the engineering report. Some sections are applicable only to certain types of uses.

2.1 GENERAL

The report shall identify all agencies or entities that will be involved in the design, treatment, distribution, construction, operation and maintenance of the recycled facilities, including a description of any legal arrangements outlining authorities and responsibilities between the agencies with respect to treatment, distribution and use of recycled water. In areas where more than one agency/entity is involved in the reuse project, a description of arrangements for coordinating all reuse-related activities (e.g. line construction/repairs) shall be provided.

An organizational chart may be useful

2.2 Rules and Regulations

The procedures, restrictions, and other requirements that will be imposed by the distributor and/or user should be described.

In multiple projects covered under a Master Permit issued by the Regional Boards where the reuse oversight responsibility is delegated to the distributor and/or user, the requirements and restrictions should be codified into a set of enforceable rules and regulations. The rules and regulations should include a compliance program to be used to protect the public health and prevent cross connections. Describe in the report the adoption of enforceable rules and regulations that cover all of the design and construction, operation and maintainence of the distribution systems and use areas, as well as use area control measures. Provide a description of the organization of the agency or agencies who has the authority to implement and enforce the rules and regulations, and the responsibilities of pertinent personnel involved in the reuse program.

Reference to any ordinances, rules of service, contractual arrangements, etc. should be provided.

2.3 Producer – Distributor - User

The producer is the public or private entity that will treat and/or distribute the recycled water used in the project. Where more than one entity is involved in the treatment or distribution of the recycled water, the roles and responsibilities of each entity (i.e. producer, distributor, user) should be described.

2.4 Raw Wastewater

Describe the chemical quality, including ranges with median and 95th percentile values;

Describe the source of the wastewater to be used and the proportion and types of industrial waste, and

Describe all source control programs.

2.5 Treatment Processes

Provide a schematic of the treatment train;

Describe the treatment processes including loading rates and contact times;

filtration design criteria should be provided (filtration and backwash rates, filter depth and media specifications, etc.). The expected turbidities of the filter influent (prior to the addition of chemicals) and the filter effluent should be stated;

State the chemicals that will be used, the method of mixing, the degree of mixing, the point of application, and the dosages. Also describe the chemical storage and handling facilities, and

Description of the operation and maintenance manuals available.

2.6 Plant Reliability Features

The plant reliability features proposed to comply with Sections 60333 - 60355 of the Water Recycling Criteria should be described in detail. The discussion of each reliability feature

should state under what conditions it will be actuated. When alarms are used to indicate system failure, the report should state where the alarm will be received, how the location is staffed, and who will be notified. The report should also state the hours that the plant will be staffed.

2.7 Supplemental Water Supply

The report should describe all supplemental water supplies. The description should include:

* Purpose
* Source
* Quality
* Quantity available
* Cross-connection control and backflow prevention measures

2.8 Monitoring and Reporting

The report should describe the planned monitoring and reporting program, including all monitoring required by the Water Recycling Criteria, and include the frequency and location of sampling. Where continuous analysis and recording equipment is used, the method and frequency of calibration should be stated. All analyses shall be performed by a laboratory approved by the State Department of Health Services.

2.9 Contingency Plan

Section 60323 (c) of the Water Recycling Criteria requires that the engineering report contain a contingency plan designed to prevent inadequately treated wastewater from being delivered to the user. The contingency plan should include:

* A list of conditions which would require an immediate diversion to take place;
* A description of the diversion procedures;
* A description of the diversion area including capacity, holding time and return capabilities;
* A description of plans for activation of supplemental supplies (if applicable);
* A plan for the disposal or treatment of any inadequately treated effluent;
    * A description of failsafe features in the event of a power failure, and

A plan (including methods) for notifying the recycled water user(s), the regional board, the state and local health departments, and other agencies as appropriate, of any treatment failures that could result in the delivery of inadequately treated recycled water to the use area.

3.0 TRANSMISSION AND DISTRIBUTION SYSTEMS

Maps and/or plans showing the location of the transmission facilities and the distribution system layout should be provided. The plans should include the ownership and location of all potable water lines, recycled water lines and sewer lines within the recycled water service area and use area(s).

4.0 USE AREAS

The description of each use area should include:

* The type of land uses;

* The specific type of reuse proposed;

* The party(s) responsible for the distribution and use of the recycled water at the site;

* Identification of other governmental entities which may have regulatory jurisdiction over the re-use site such as the US Department of Agriculture, State Department of Health Services, Food and Drug Branch, the State Department of Health Services, Licensing and Certification Section, etc. These agencies should also be provided with a copy of the Title 22 Engineering Report for review and comment.

* Use area containment measures;

* A map showing:

  -Specific areas of use

  -Areas of public access

  -Surrounding land uses

  -The location and construction details of wells in or within 1000 feet of the use area

  -Location and type of signage

* The degree of potential access by employees or the public;

* For use areas where both potable and recycled water lines exist, a description of the cross-connection control procedures which will be used.

In addition to the general information described above, the following should be provided for the following specific proposed uses:

4.1 Irrigation

-Detailed plans showing all piping networks within the use area including recycled, potable, sewage and others as applicable.

-Description of what will be irrigated (e.g. landscape, specific food crop, etc.);

-Method of irrigation (e.g. spray, flood, or drip);

-The location of domestic water supply facilities in or adjacent to the use area;

-Site containment measures;
-Measures to be taken to minimize ponding;

-The direction of drainage and a description of the area to which the drainage will flow;

-A map and/or description of how the setback distances of Section 60310 will be maintained;

-Protection measures of drinking water fountains and designated outdoor eating areas, if applicable;

-Location and wording of public warning signs, and

-The proposed irrigation schedule (if public access is included).

-Measures to be taken to exclude or minimize public contact.

4.2 Impoundments

-The type of use or activity to be allowed on the impoundment;

-Description of the degree of public access;

-The conditions under which the impoundment can be expected to overflow and the expected frequency, and

-The direction of drainage and a description of the area to which the drainage will flow.

4.3 Cooling

-Type of cooling system (e.g. cooling tower, spray, condenser, etc.);

-Type of biocide to be used, if applicable;

-Type of drift eliminator to be used, if applicable, and

-Potential for employee or public exposure, and mitigative measures to be employed.

4.4 Groundwater Recharge

An assessment of potential impacts the proposal will have on underlying groundwater aquifers. The appropriate information shall be determined through consultation with the Department on a case by case basis.

4.5 Dual Plumbed Use Areas

In accordance with Sections 60313 through 60316 of the Water Recycling Criteria.

4.6 Other Industrial Uses

The appropriate information shall be determined on a case by case basis.

4.7 Use Area Design

The report should discuss how domestic water distribution system shall be protected from the recycled water in accordance with the Regulations Relating to Cross-Connections and the California Waterworks Standards, and how the facilities will be designed to minimize the chance of recycled water leaving the designated use area. Any proposed deviation from the Water Recycling Criteria and necessity therefore, should be discussed in the report.

4.8 Use Area Inspections and Monitoring

The report should describe the use area inspection program. It should identify the locations at the use area where problems are most likely to occur (e.g. ponding, runoff, overspray, cross-connections, etc.) and the personnel in charge of the monitoring and reporting of use area problems.

4.9 Employee Training

The report should describe the training which use area employees will receive to ensure compliance with the Recycled Water Criteria, and identify the entity that will provide the training and its' frequency. The report should also identify any written manuals of practice to be made available to employees.

Attachment H - Constituents to be monitored

			Controlling Water Quality Criterion for Surface Waters			
CTR #	Constituent	CAS Number	Basis	Criterion Concentration (ug/L or noted) (1)	Criterion Quantitation Limit (ug/L or noted)	Suggested Test Methods
VOLATILE ORGANICS						
28	1,1-Dichloroethane	75343	Primary MCL	5	0.5	EPA 8260B
30	1,1-Dichloroethene	75354	National Toxics Rule	0.057	0.5	EPA 8260B
41	1,1,1-Trichloroethane	71556	Primary MCL	200	0.5	EPA 8260B
42	1,1,2-Trichloroethane	79005	National Toxics Rule	0.6	0.5	EPA 8260B
37	1,1,2,2-Tetrachloroethane	79345	National Toxics Rule	0.17	0.5	EPA 8260B
75	1,2-Dichlorobenzene	95501	Taste & Odor	10	0.5	EPA 8260B
29	1,2-Dichloroethane	107062	National Toxics Rule	0.38	0.5	EPA 8260B
	cis-1,2-Dichloroethene	156592	Primary MCL	6	0.5	EPA 8260B
31	1,2-Dichloropropane	78875	Calif. Toxics Rule	0.52	0.5	EPA 8260B
101	1,2,4-Trichlorobenzene	120821	Public Health Goal	5	0.5	EPA 8260B
76	1,3-Dichlorobenzene	541731	Taste & Odor	10	0.5	EPA 8260B
32	1,3-Dichloropropene	542756	Primary MCL	0.5	0.5	EPA 8260B
77	1,4-Dichlorobenzene	106467	Primary MCL	5	0.5	EPA 8260B
17	Acrolein	107028	Aquatic Toxicity	21	2	EPA 8260B
18	Acrylonitrile	107131	National Toxics Rule	0.059	2	EPA 8260B
19	Benzene	71432	Primary MCL	1	0.5	EPA 8260B
20	Bromoform	75252	Calif. Toxics Rule	4.3	0.5	EPA 8260B
34	Bromomethane	74839	Calif. Toxics Rule	48	1	EPA 8260B
21	Carbon tetrachloride	56235	National Toxics Rule	0.25	0.5	EPA 8260B
22	Chlorobenzene (mono chlorobenzene)	108907	Taste & Odor	50	0.5	EPA 8260B
24	Chloroethane	75003	Taste & Odor	16	0.5	EPA 8260B
25	2- Chloroethyl vinyl ether	110758	Aquatic Toxicity	122 (3)	1	EPA 8260B
26	Chloroform	67663	OEHHA Cancer Risk	1.1	0.5	EPA 8260B
35	Chloromethane	74873	USEPA Health Advisory	3	0.5	EPA 8260B
23	Dibromochloromethane	124481	Calif. Toxics Rule	0.41	0.5	EPA 8260B
27	Dichlorobromomethane	75274	Calif. Toxics Rule	0.56	0.5	EPA 8260B
36	Dichloromethane	75092	Calif. Toxics Rule	4.7	0.5	EPA 8260B
33	Ethylbenzene	100414	Taste & Odor	29	0.5	EPA 8260B
88	Hexachlorobenzene	118741	Calif. Toxics Rule	0.00075	1	EPA 8260B
89	Hexachlorobutadiene	87683	National Toxics Rule	0.44	1	EPA 8260B
91	Hexachloroethane	67721	National Toxics Rule	1.9	1	EPA 8260B
94	Naphthalene	91203	USEPA IRIS	14	10	EPA 8260B
38	Tetrachloroethene	127184	National Toxics Rule	0.8	0.5	EPA 8260B
39	Toluene	108883	Taste & Odor	42	0.5	EPA 8260B
40	trans-1,2-Dichloroethylene	156605	Primary MCL	10	0.5	EPA 8260B
43	Trichloroethene	79016	National Toxics Rule	2.7	0.5	EPA 8260B
44	Vinyl chloride	75014	Primary MCL	0.5	0.5	EPA 8260B
	Methyl-tert-butyl ether (MTBE)	1634044	Secondary MCL	5	0.5	EPA 8260B
	Trichlorofluoromethane	75694	Primary MCL	150	5	EPA 8260B
	1,1,2-Trichloro-1,2,2-Trifluoroethane	76131	Primary MCL	1200	10	EPA 8260B
	Styrene	100425	Taste & Odor	11	0.5	EPA 8260B
	Xylenes	1330207	Taste & Odor	17	0.5	EPA 8260B

SEMI-VOLATILE ORGANICS						
60	1,2-Benzanthracene	56553	Calif. Toxics Rule	0.0044	5	EPA 8270C
85	1,2-Diphenylhydrazine	122667	National Toxics Rule	0.04	1	EPA 8270C
45	2-Chlorophenol	95578	Taste and Odor	0.1	2	EPA 8270C
46	2,4-Dichlorophenol	120832	Taste and Odor	0.3	1	EPA 8270C
47	2,4-Dimethylphenol	105679	Calif. Toxics Rule	540	2	EPA 8270C
49	2,4-Dinitrophenol	51285	National Toxics Rule	70	5	EPA 8270C
82	2,4-Dinitrotoluene	121142	National Toxics Rule	0.11	5	EPA 8270C
55	2,4,6-Trichlorophenol	88062	Taste and Odor	2	10	EPA 8270C
83	2,6-Dinitrotoluene	606202	USEPA IRIS	0.05	5	EPA 8270C
50	2-Nitrophenol	25154557	Aquatic Toxicity	150 (5)	10	EPA 8270C
71	2-Chloronaphthalene	91587	Aquatic Toxicity	1600 (6)	10	EPA 8270C
78	3,3'-Dichlorobenzidine	91941	National Toxics Rule	0.04	5	EPA 8270C
62	3,4-Benzofluoranthene	205992	Calif. Toxics Rule	0.0044	10	EPA 8270C
52	4-Chloro-3-methylphenol	59507	Aquatic Toxicity	30	5	EPA 8270C
48	4,6-Dinitro-2-methylphenol	534521	National Toxics Rule	13.4	10	EPA 8270C
51	4-Nitrophenol	100027	USEPA Health Advisory	60	5	EPA 8270C
69	4-Bromophenyl phenyl ether	101553	Aquatic Toxicity	122	10	EPA 8270C
72	4-Chlorophenyl phenyl ether	7005723	Aquatic Toxicity	122 (3)	5	EPA 8270C
56	Acenaphthene	83329	Taste and Odor	20	1	EPA 8270C
57	Acenaphthylene	208968	No Criteria Available		10	EPA 8270C
58	Anthracene	120127	Calif. Toxics Rule	9,600	10	EPA 8270C
59	Benzidine	92875	National Toxics Rule	0.00012	5	EPA 8270C
61	Benzo(a)pyrene (3,4-Benzopyrene)	50328	Calif. Toxics Rule	0.0044	0.1	EPA 8270C
63	Benzo(g,h,i)perylene	191242	No Criteria Available		5	EPA 8270C
64	Benzo(k)fluoranthene	207089	Calif. Toxics Rule	0.0044	2	EPA 8270C
65	Bis(2-chloroethoxy) methane	111911	No Criteria Available		5	EPA 8270C
66	Bis(2-chloroethyl) ether	111444	National Toxics Rule	0.031	1	EPA 8270C
67	Bis(2-chloroisopropyl) ether	39638329	Aquatic Toxicity	122 (3)	10	EPA 8270C
68	Bis(2-ethylhexyl) phthalate	117817	National Toxics Rule	1.8	3	EPA 8270C
70	Butyl benzyl phthalate	85687	Aquatic Toxicity	3 (7)	10	EPA 8270C
73	Chrysene	218019	Calif. Toxics Rule	0.0044	5	EPA 8270C
81	Di-n-butylphthalate	84742	Aquatic Toxicity	3 (7)	10	EPA 8270C
84	Di-n-octylphthalate	117840	Aquatic Toxicity	3 (7)	10	EPA 8270C
74	Dibenzo(a,h)-anthracene	53703	Calif. Toxics Rule	0.0044	0.1	EPA 8270C
79	Diethyl phthalate	84662	Aquatic Toxicity	3 (7)	2	EPA 8270C
80	Dimethyl phthalate	131113	Aquatic Toxicity	3 (7)	2	EPA 8270C
86	Fluoranthene	206440	Calif. Toxics Rule	300	10	EPA 8270C
87	Fluorene	86737	Calif. Toxics Rule	1300	10	EPA 8270C
90	Hexachlorocyclopentadiene	77474	Taste and Odor	1	1	EPA 8270C
92	Indeno(1,2,3-c,d)pyrene	193395	Calif. Toxics Rule	0.0044	0.05	EPA 8270C
93	Isophorone	78591	National Toxics Rule	8.4	1	EPA 8270C
98	N-Nitrosodiphenylamine	86306	National Toxics Rule	5	1	EPA 8270C
96	N-Nitrosodimethylamine	62759	National Toxics Rule	0.00069	5	EPA 8270C
97	N-Nitrosodi-n-propylamine	621647	Calif. Toxics Rule	0.005	5	EPA 8270C
95	Nitrobenzene	98953	National Toxics Rule	17	10	EPA 8270C
53	Pentachlorophenol	87865	Calif. Toxics Rule	0.28	0.2	EPA 8270C
99	Phenanthrene	85018	No Criteria Available		5	EPA 8270C
54	Phenol	108952	Taste and Odor	5	1	EPA 8270C
100	Pyrene	129000	Calif. Toxics Rule	960	10	EPA 8270C

INORGANICS						
	Aluminum	7429905	Ambient Water Quality	87	50	EPA 6020/200.8
1	Antimony	7440360	Primary MCL	6	5	EPA 6020/200.8
2	Arsenic	7440382	Ambient Water Quality	0.018	0.01	EPA 1632
15	Asbestos	1332214	National Toxics Rule/ Primary MCL	7 MFL	0.2 MFL >10um	EPA/600/R-93/116(PCM)
	Barium	7440393	Basin Plan Objective	100	100	EPA 6020/200.8
3	Beryllium	7440417	Primary MCL	4	1	EPA 6020/200.8
4	Cadmium	7440439	Public Health Goal	0.07	0.25	EPA 1638/200.8
5a	Chromium (total)	7440473	Primary MCL	50	2	EPA 6020/200.8
5b	Chromium (VI)	18540299	Public Health Goal	0.2	0.5	EPA 7199/ 1636
6	Copper	7440508	National Toxics Rule	4.1 (2)	0.5	EPA 6020/200.8
14	Cyanide	57125	National Toxics Rule	5.2	5	EPA 9012A
	Fluoride	7782414	Public Health Goal	1000	0.1	EPA 300
	Iron	7439896	Secondary MCL	300	100	EPA 6020/200.8
7	Lead	7439921	Calif. Toxics Rule	0.92 (2)	0.5	EPA 1638
8	Mercury	7439976	TMDL Development		0.0002 (11)	EPA 1669/1631
	Manganese	7439965	Secondary MCL/ Basin Plan Objective	50	20	EPA 6020/200.8
9	Nickel	7440020	Calif. Toxics Rule	24 (2)	5	EPA 6020/200.8
10	Selenium	7782492	Calif. Toxics Rule	5 (8)	5	EPA 6020/200.8
11	Silver	7440224	Calif. Toxics Rule	0.71 (2)	1	EPA 6020/200.8
12	Thallium	7440280	National Toxics Rule	1.7	1	EPA 6020/200.8
	Tributyltin	688733	Ambient Water Quality	0.063	0.002	EV-024/025
13	Zinc	7440666	Calif. Toxics Rule/ Basin Plan Objective	54/ 16 (2)	10	EPA 6020/200.8
PESTICIDES - PCBs						
110	4,4'-DDD	72548	Calif. Toxics Rule	0.00083	0.02	EPA 8081A
109	4,4'-DDE	72559	Calif. Toxics Rule	0.00059	0.01	EPA 8081A
108	4,4'-DDT	50293	Calif. Toxics Rule	0.00059	0.01	EPA 8081A
112	alpha-Endosulfan	959988	National Toxics Rule	0.056 (9)	0.02	EPA 8081A
103	alpha-Hexachlorocyclohexane (BHC)	319846	Calif. Toxics Rule	0.0039	0.01	EPA 8081A
	Alachlor	15972608	Primary MCL	2	1	EPA 8081A
102	Aldrin	309002	Calif. Toxics Rule	0.00013	0.005	EPA 8081A
113	beta-Endosulfan	33213659	Calif. Toxics Rule	0.056 (9)	0.01	EPA 8081A
104	beta-Hexachlorocyclohexane	319857	Calif. Toxics Rule	0.014	0.005	EPA 8081A
107	Chlordane	57749	Calif. Toxics Rule	0.00057	0.1	EPA 8081A
106	delta-Hexachlorocyclohexane	319868	No Criteria Available		0.005	EPA 8081A
111	Dieldrin	60571	Calif. Toxics Rule	0.00014	0.01	EPA 8081A
114	Endosulfan sulfate	1031078	Ambient Water Quality	0.056	0.05	EPA 8081A
115	Endrin	72208	Calif. Toxics Rule	0.036	0.01	EPA 8081A
116	Endrin Aldehyde	7421934	Calif. Toxics Rule	0.76	0.01	EPA 8081A
117	Heptachlor	76448	Calif. Toxics Rule	0.00021	0.01	EPA 8081A
118	Heptachlor Epoxide	1024573	Calif. Toxics Rule	0.0001	0.01	EPA 8081A
105	Lindane (gamma-Hexachlorocyclohexane)	58899	Calif. Toxics Rule	0.019	0.019	EPA 8081A
119	PCB-1016	12674112	Calif. Toxics Rule	0.00017 (10)	0.5	EPA 8082
120	PCB-1221	11104282	Calif. Toxics Rule	0.00017 (10)	0.5	EPA 8082

121	PCB-1232	11141165	Calif. Toxics Rule	0.00017 (10)	0.5	EPA 8082
122	PCB-1242	53469219	Calif. Toxics Rule	0.00017 (10)	0.5	EPA 8082
123	PCB-1248	12672296	Calif. Toxics Rule	0.00017 (10)	0.5	EPA 8082
124	PCB-1254	11097691	Calif. Toxics Rule	0.00017 (10)	0.5	EPA 8082
125	PCB-1260	11096825	Calif. Toxics Rule	0.00017 (10)	0.5	EPA 8082
126	Toxaphene	8001352	Calif. Toxics Rule	0.0002	0.5	EPA 8081A
	Atrazine	1912249	Public Health Goal	0.15	1	EPA 8141A
	Bentazon	25057890	Primary MCL	18	2	EPA 643/ 515.2
	Carbofuran	1563662	CDFG Hazard Assess.	0.5	5	EPA 8318
	2,4-D	94757	Primary MCL	70	10	EPA 8151A
	Dalapon	75990	Ambient Water Quality	110	10	EPA 8151A
	1,2-Dibromo-3-chloropropane (DBCP)	96128	Public Health Goal	0.0017	0.01	EPA 8260B
	Di(2-ethylhexyl)adipate	103231	USEPA IRIS	30	5	EPA 8270C
	Dinoseb	88857	Primary MCL	7	2	EPA 8151A
	Diquat	85007	Ambient Water Quality	0.5	4	EPA 8340/ 549.1/HPLC
	Endothal	145733	Primary MCL	100	45	EPA 548.1
	Ethylene Dibromide	106934	OEHHA Cancer Risk	0.0097	0.02	EPA 8260B/ 504
	Glyphosate	1071836	Primary MCL	700	25	HPLC/ EPA 547
	Methoxychlor	72435	Public Health Goal	30	10	EPA 8081A
	Molinate (Ordram)	2212671	CDFG Hazard Assess.	13	2	EPA 634
	Oxamyl	23135220	Public Health Goal	50	20	EPA 8318/ 632
	Picloram	1918021	Primary MCL	500	1	EPA 8151A
	Simazine (Princep)	122349	USEPA IRIS	3.4	1	EPA 8141A
	Thiobencarb	28249776	Basin Plan Objective/ Secondary MCL	1	1	HPLC/ EPA 639
16	2,3,7,8-TCDD (Dioxin)	1746016	Calif. Toxics Rule	1.30E-08	5.00E-06	EPA 8290 (HRGC) MS
	2,4,5-TP (Silvex)	93765	Ambient Water Quality	10	1	EPA 8151A
	Diazinon	333415	CDFG Hazard Assess.	0.05	0.25	EPA 8141A/ GCMS
	Chlorpyrifos	2921882	CDFG Hazard Assess.	0.014	1	EPA 8141A/ GCMS

OTHER CONSTITUENTS						
	Ammonia (as N)	7664417	Ambient Water Quality	1500 (4)		EPA 350.1
	Chloride	16887006	Agricultural Use	106,000		EPA 300.0
	Flow			1 CFS		
	Hardness (as $CaCO_3$)			5000		EPA 130.2
	Foaming Agents (MBAS)		Secondary MCL	500		SM5540C
	Nitrate (as N)	14797558	Primary MCL	10,000	2,000	EPA 300.0
	Nitrite (as N)	14797650	Primary MCL	1000	400	EPA 300.0
	pH		Basin Plan Objective	6.5-8.5	0.1	EPA 150.1
	Phosphorus, Total (as P)	7723140	USEPA IRIS	0.14		EPA 365.3
	Specific conductance (EC)		Agricultural Use	700 umhos/cm		EPA 120.1
	Sulfate		Secondary MCL	250,000	500	EPA 300.0
	Sulfide (as S)		Taste and Odor	0.029		EPA 376.2
	Sulfite (as SO_3)		No Criteria Available			SM4500-SO3
	Temperature		Basin Plan Objective	^oF		
	Total Disolved Solids (TDS)		Agricultural Use	450,000		EPA 160.1

FOOTNOTES:

(1) - The Criterion Concentrations serve only as a point of reference for the selection of the appropriate analytical method. They do not indicate a regulatory decision that the cited concentration is either necessary or sufficient for full protection of beneficial uses. Available technology may require that effluent limits be set lower than these values.

(2) - Freshwater aquatic life criteria for metals are expressed as a function of total hardness (mg/L) in the water body. Values displayed correspond to a total hardness of 40 mg/L.

(3) - For haloethers

(4) - Freshwater aquatic life criteria for ammonia are expressed as a function of pH and temperature of the water body. Values displayed correspond to pH 8.0 and temperature of 22 C.

(5) - For nitrophenols.

(6) - For chlorinated naphthalenes.

(7) - For phthalate esters.

(8) - Basin Plan objective = 2 ug/L for Salt Slough and specific constructed channels in the Grassland watershed.

(9) - Criteria for sum of alpha- and beta- forms.

(10) - Criteria for sum of all PCBs.

(11) - Mercury monitoring shall utilize "ultra-clean" sampling and analytical methods. These methods include:

Method 1669: Sampling Ambient Water for Trace Metals at EPA Water Quality Criteria Levels, US EPA; and

Method 1631: Mercury in Water by Oxidation, Purge and Trap, and Cold Vapor Atomic Fluoresence, US EPA

Dioxin and Furan Sampling

Section 3 of the State Implementation Plan requires that each NPDES discharger conduct sampling and analysis of dioxin and dibenzofuran congeners. Dioxin and Furan sampling shall be conducted in the effluent and receiving water once during dry weather and once during wet weather.

Each sample shall be analyzed for the seventeen congeners listed in the table below. High Resolution GCMS Method 8290, or another method capable of individually quantifying the congeners to an equivalent detection level, shall be used for the analyses.

For each sample the discharger shall report:

- The measured or estimated concentration of each of the seventeen congeners
- The quantifiable limit of the test (as determined by procedures in Section 2.4.3, No. 5 of the SIP)
- The Method Detection Level (MDL) for the test

The TCDD equivalent concentration for each analysis calculated by multiplying the concentration of each congener by the Toxicity Equivalency Factor (TEF) in the following table, and summing the resultant products to determine the equivalent toxicity of the sample expressed as 2,3,7,8-TCDD.

Congener	TEF
2,3,7,8TetraCDD	1
1,2,3,7,8-PentaCDD	1.0
1,2,3,4,7,8-HexaCDD	0.1
1,2,3,6,7,8-HexaCDD	0.1
1,2,3,7,8,9-HexaCDD	0.1
1,2,3,4,6,7,8-HeptaCDD	0.01
OctaCDD	0.0001
2,3,7,8-TetraCDF	0.1
1,2,3,7,8-PentaCDF	0.05
2,3,4,7,8-PentaCDF	0.5
1,2,3,4,7,8-HexaCDF	0.1
1,2,3,6,7,8-HexaCDF	0.1
1,2,3,7,8,9-HexaCDF	0.1
2,3,4,6,7,8-HexaCDF	0.1
1,2,3,4,6,7,8-HeptaCDF	0.01
1,2,3,4,7,8,9-HeptaCDF	0.01
OctaCDF	0.0001

ATTACHMENT I

REQUIREMENTS FOR MONITORING WELL INSTALLATION WORKPLANS AND MONITORING WELL INSTALLATION REPORTS

Prior to installation of groundwater monitoring wells, the Discharger shall submit a workplan containing, at a minimum, the information listed in Section 1, below. Wells may be installed after staff approve the workplan. Upon installation of the monitoring wells, the Discharger shall submit a well installation report which includes the information contained in Section 2, below. All workplans and reports must be prepared under the direction of, and signed by, a registered geologist or civil engineer licensed by the State of California.

SECTION 1 - MONITORING WELL INSTALLATION WORKPLAN AND GROUNDWATER SAMPLING AND ANALYSIS PLAN

The monitoring well installation workplan shall contain the following minimum information:

A. General Information:
   Purpose of the well installation project
   Brief description of local geologic and hydrogeologic conditions
   Proposed monitoring well locations and rationale for well locations
   Topographic map showing facility location, roads, and surface water bodies
   Large scaled site map showing all existing on-site wells, proposed wells, surface drainage courses, surface water bodies, buildings, waste handling facilities, utilities, and major physical and man-made features

B. Drilling Details:
   On-site supervision of drilling and well installation activities
   Description of drilling equipment and techniques
   Equipment decontamination procedures
   Soil sampling intervals (if appropriate) and logging methods

C. Monitoring Well Design (in narrative and/or graphic form):
   Diagram of proposed well construction details
   - Borehole diameter
   - Casing and screen material, diameter, and centralizer spacing (if needed)
   - Type of well caps (bottom cap either screw on or secured with stainless steel screws)
   - Anticipated depth of well, length of well casing, and length and position of perforated interval
   - Thickness, position and composition of surface seal, sanitary seal, and sand pack
   - Anticipated screen slot size and filter pack

D. Well Development (not to be performed until at least 48 hours after sanitary seal placement):
   Method of development to be used (i.e., surge, bail, pump, etc.)
   Parameters to be monitored during development and record keeping technique
   Method of determining when development is complete

Disposal of development water

E. Well Survey (precision of vertical survey data shall be at least 0.01 foot):
Identify the Licensed Land Surveyor or Civil Engineer that will perform the survey
Datum for survey measurements
List well features to be surveyed (i.e. top of casing, horizontal and vertical coordinates, etc.)

F. Schedule for Completion of Work

G. **Appendix: Groundwater Sampling and Analysis Plan (SAP)**
The Groundwater SAP shall be included as an appendix to the workplan, and shall be utilized as a guidance document that is referred to by individuals responsible for conducting groundwater monitoring and sampling activities.

Provide a detailed written description of standard operating procedures for the following:

- Equipment to be used during sampling
- Equipment decontamination procedures
- Water level measurement procedures
- Well purging (include a discussion of procedures to follow if three casing volumes cannot be purged)
- Monitoring and record keeping during water level measurement and well purging (include copies of record keeping logs to be used)
- Purge water disposal
- Analytical methods and required reporting limits
- Sample containers and preservatives
- Sampling
  - General sampling techniques
  - Record keeping during sampling (include copies of record keeping logs to be used)
  - QA/QC samples
- Chain of Custody
- Sample handling and transport

SECTION 2 - Monitoring Well Installation Report

The monitoring well installation report must provide the information listed below. In addition, the report must also clearly identify, describe, and justify any deviations from the approved workplan.

A. General Information:
Purpose of the well installation project
Brief description of local geologic and hydrogeologic conditions encountered during installation of the wells
Number of monitoring wells installed and copies of County Well Construction Permits
Topographic map showing facility location, roads, surface water bodies
Scaled site map showing all previously existing wells, newly installed wells, surface water bodies, buildings, waste handling facilities, utilities, and other major physical and man-made features.

B. Drilling Details (in narrative and/or graphic form):

On-site supervision of drilling and well installation activities
Drilling contractor and driller's name
Description of drilling equipment and techniques
Equipment decontamination procedures
Soil sampling intervals and logging methods

Well boring log

- Well boring number and date drilled
- Borehole diameter and total depth
- Total depth of open hole (same as total depth drilled if no caving or back-grouting occurs)
- Depth to first encountered groundwater and stabilized groundwater depth
- Detailed description of soils encountered, using the Unified Soil Classification System

C. Well Construction Details (in narrative and/or graphic form):

Well construction diagram, including:

- Monitoring well number and date constructed
- Casing and screen material, diameter, and centralizer spacing (if needed)
- Length of well casing, and length and position of perforated interval
- Thickness, position and composition of surface seal, sanitary seal, and sand pack
- Type of well caps (bottom cap either screw on or secured with stainless steel screws)

E. Well Development:

Date(s) and method of development
How well development completion was determined
Volume of water purged from well and method of development water disposal
Field notes from well development should be included in report

F. Well Survey (survey the top rim of the well casing with the cap removed):

Identify the coordinate system and datum for survey measurements
Describe the measuring points (i.e. ground surface, top of casing, etc.)
Present the well survey report data in a table
Include the Registered Engineer or Licensed Surveyor's report and field notes in appendix